A study of power branch points PhL 1.20.10

I think I have gotten this wrong in my recent notes. Need some examples. Here we start simple, and then build up to a fancy case where we avoid pinching branch points.

Example 1: $w = z^{1/2}$

We think of the angle in any sheet as being in the range $(0,2\pi)$.

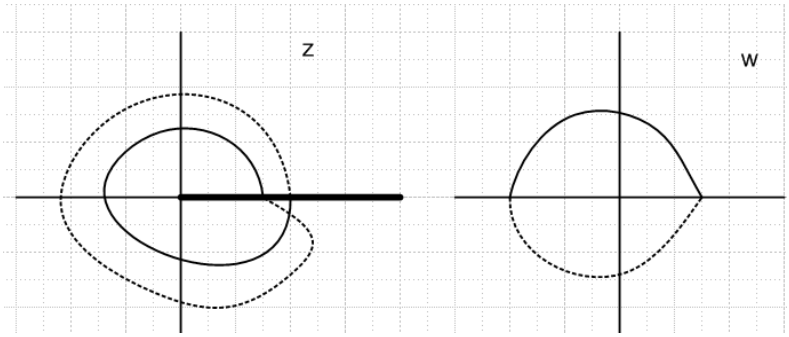

The domain has two sheets, the range has one sheet. Each domain sheet maps into a wedge of the w plane. In this case, the first sheet maps into the upper half w plane, for example. If you consider f:D→R, you can consider the global domain to be all of the two sheets, because each point goes into a single point in the range. However, we usually think of the domain as being just one of these z-plane sheets. For each z-plane sheet, we have a different "branch" of the function $z^{1/2}$. It just happens that each branch is not onto because it does not use up the range.

When we draw the branch point to the right, angles are easy to think about:

Sheet	Domain Global Angle	Domain Sheet Angle	Range Angle
1=black	$(0,2\pi)$	$(0,2\pi)$	$(0,\pi)$
2=dotted	$(2\pi,4\pi)$	$(0,2\pi)$	$(\pi,2\pi)$

The range angle is always half the Domain Global Angle.

Example 1a: $w = z^{1/2}$ but with branch cut to the left.

I am able to make these pictures by rotating the top left picture 180 degrees CW and the right one 90 degrees CW. Here we think of a plane's angle being $(-\pi,\pi)$.

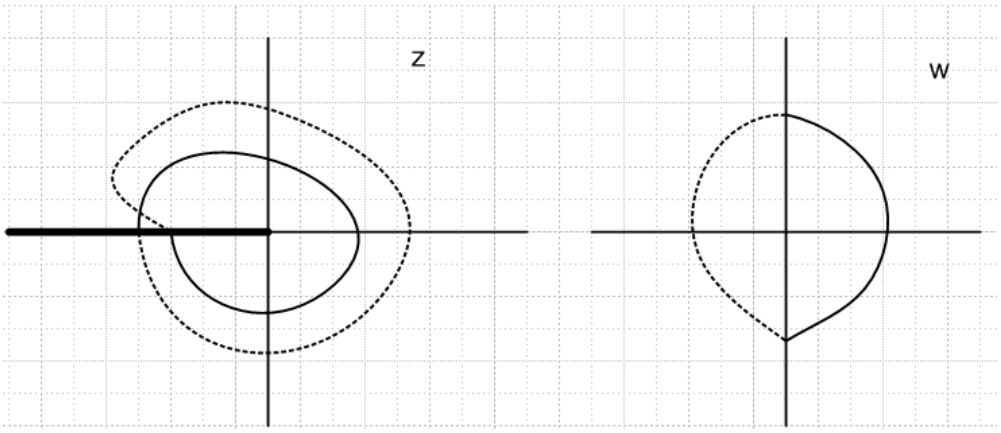

This is the normal way cuts are handled! But angles are more complicated to describe:

Sheet	Domain Global Angle	Domain Sheet Angle	Range Angle
1=black	$(-\pi, \pi)$	$(-\pi,\pi)$	$(-\pi/2,\pi/2)$
2=dotted	$(\pi,2\pi) \cup (-\pi,-2\pi)$	$(-\pi,\pi)$	$(\pi/2,\pi) \cup (-\pi/2,-\pi)$

Notice that both Domain Sheet angle and range angle are in the range $(-\pi,\pi)$. If we think of the global domain as having angles $(-2\pi,2\pi)$, and it we assign $(-\pi,\pi)$ to the first sheet, then we have to assign two disjoint regions of global angle to the second sheet. But the local angle on that sheet is still $(-\pi,\pi)$. We might avoid this disjointness by saying the global domain angle range was $(-\pi,3\pi)$, perhaps, and assign the range $(\pi,3\pi)$ to the second sheet. But then the range angle is $(\pi/2,3\pi/2)$ which is "out of range". We of course know that on a sheet, $3\pi/2 = -\pi/2$, but we have to be careful if things are raised to a power. The safe thing to do is the disjoint approach shown above.

The general Nature of the situation is not affected by how you draw the branch cut, or how you label the angles. In the next few examples, we continue with cut to the right so angles are simple.

Example 2: $\mathbf{w = z^{3/2}}$

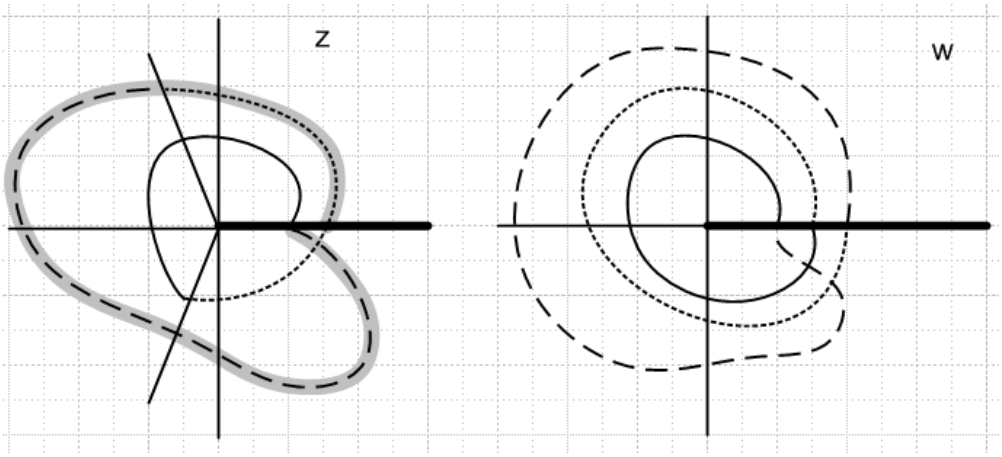

As we wind around twice in the domain, we wind around 3 times in the range. For this function in a global sense, the domain has 2 sheets, the range has 3 sheets. Whenever a complex plane has multiple

sheets, you need to draw a "cut", and so in this case we really do have cuts in both planes. [Ahlfors confirms this notion right in his text on page 97 where he considers z^n with n>1 integer.]

Imagine being an ant in the domain, with a partner ant in the range. When the domain ant passes through his cut, the range might be far from one of his cuts. The three line types allow you to correlate the motion of the z-ant with the motion of the w-ant. In the z plane, I had to add an extra wide marking to show which sheet the z-ant is on, since this cannot be found from the line-type marking.

As a global "function" with 2 domain sheets and 3 range sheets, each point in the domain maps into only a single point in the range, so it really is a "function". However, each point must be labeled in the following manner: z = (x,y,s) where s is the sheet number, and similarly w = (x', y', s') if you like.

If we want to talk about a "branch" of the function, we restrict to one sheet on the fastest moving plane. In this case that is the w plane. So the "1st branch" of this function has a domain which is the wedge (0,240°) and a range which is the entire w plane. The entire domain of this branch lies on one sheet of the z plane.

The "2nd branch" has a range which is the second sheet of the range, and a domain that is partly on sheet 1 and partly on sheet 2 of the domain. But in this case we could rotate the cut in z-space so that the entire domain was on one sheet.

Is there some book where pictures like these are discussed? I have two complex books, neither talks much about such things. Well, Ahlfors p 97 last paragraph talks about $w = z^n$ with n > 1 integer. A has a chapter on "analytic functions as mappings" which my green Schaum does not.

For rational exponents, you can represent the cut situation with a picture like this:

domain = 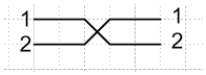

range = 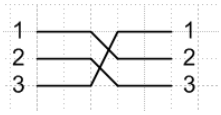

Each picture shows how the last sheet ties back to the first sheet.

Example 2a: $w = z^{3/2+\varepsilon}$

Here we add a small irrational ε to the exponent, like π/1000. What happens now? The domain and range each have an infinite number of sheets and we never come back to the first sheet. If we try to draw ant spirals as in Example 2, even after we draw 200 spirals in the domain, with a corresponding 300.02 spirals in the range, we never get back to "the starting position" $z_1 \rightarrow w_1$. In this case we would have to say

domain = 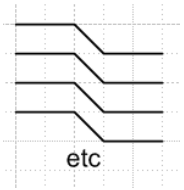

range = 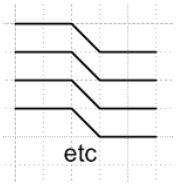

This

Example 3: $w = z^{2/3}$

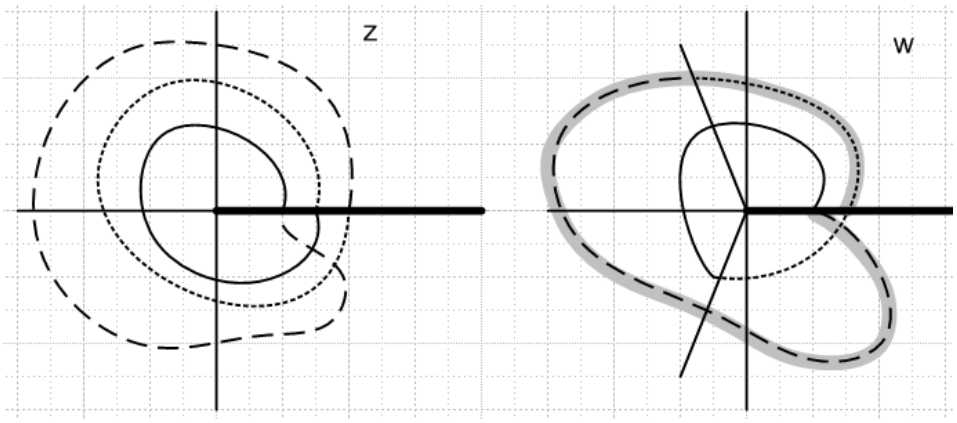

Now the domain has 3 sheets and the range has 2 sheets. As before, in a global sense we have a function if we indicate points as z = (x,y,s). The fastest moving plane now is the z plane, so we can define three branch functions, each associated with one of the domain sheets. The first branch maps the first sheet (solid line) into a portion of the first sheet of the w plane, etc etc.

Example 4: $w = [\ (z-a)^2\ ]^{1/2}$

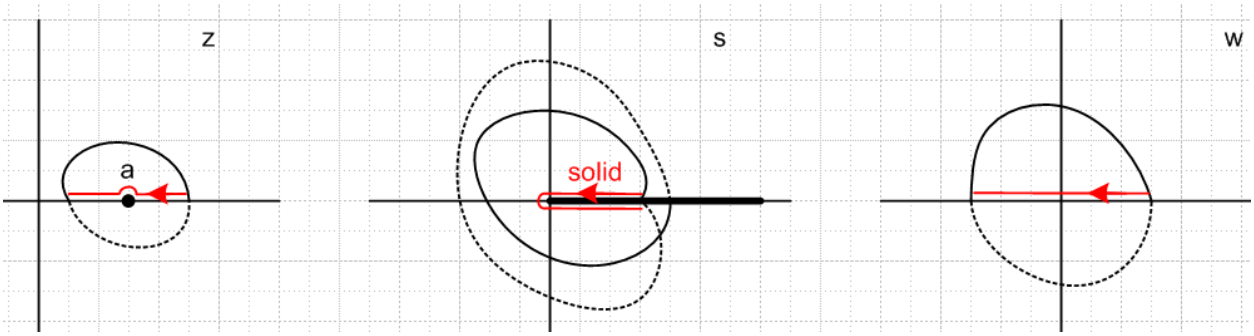

This example is more complicated because we are chaining two analytic functions. We have

$s = (z-a)^2$ $\qquad$ $w = s^{1/2}$

We now have a z space ant who has two partner ants (one in s space, another in w space), and we have drawn the motions (ignore red for now). The fastest moving plane is the s-plane, so we define our first branch of our function w = w(z) as follows: It is the solid ant track in the z plane going into the entire s plane (solid ant track there) and we have that to into the solid line in the w plane.

First Branch function:

domain:	*upper* half z plane
range in s:	Sheet 1 (of two possible)
range in w:	*upper* half w plane.

Only the s-plane has a branch cut because only it has more than one sheet.

Now in applications of functions like this, we often find ourselves doing a path like the red path in the domain (left-most picture). We really mean the red line to be on the real axis and passing right through

the point z = a. Since our red line is in the domain of the First Branch of our function, it must be entirely in the upper half z plane, since that is the domain for this Branch. Therefore, you should think of the red ant-trail as passing in a little loop above the point z = a.

What does this red ant trail look like in the s-plane? Well, our First Branch is selected so that for the first part of the red trail, s is real and positive. It then winds around the branch point in the s plane and gets back to the real axis, but of course we know our function $s = (z-a)^2$ has now picked up a phase 2π because our z-a variable picked up a phase π in going around the point a in the z plane. [In s-space, for either sheet we are using angles $(0,2\pi)$, same for all spaces here]. As we then come into the w place, that 2π phase is lowered to π and we are on the negative real axis.

The ant trail in the w plane again must lie in the upper half plane since this is the range of the function branch we are talking about. For our selected branch we really have

$$f(z) = [\,(z-a)^2\,]^{1/2} = +(z-a)$$

so in the final w plane, there is nothing notable about the origin. As we pass through it, the function z-a just becomes negative. So on the first half of our red ant trail, $z - a > 0$. On the second half $a-z > 0$.

Now consider this alternate red ant path: $s = (z-a)^2$ $w = s^{1/2}$

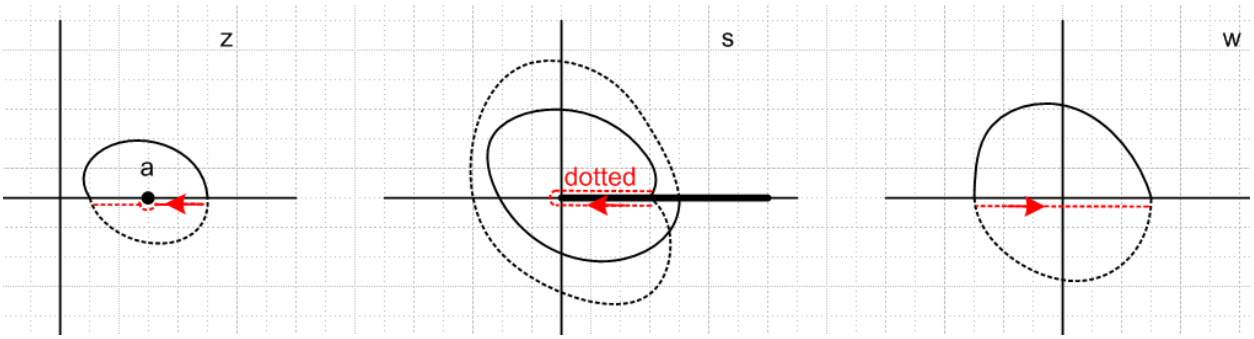

We are now using the second or dotted sheet in s-space, exclusively. On the first part of this path (red arrow) z-space has phase 2π, s space has phase 4π global, or 2π on the dotted second sheet. (Under the cut means phase = 2π.) In w space we have phase = π, so we are on the negative real axis with our red arrow there. In all three spaces, the red trajectory stays in dotted branch locations. This branch is this function

$$f(z) = [\,(z-a)^2\,]^{1/2} = -(z-a)$$

Now for the Grande Finale, consider this ant path:

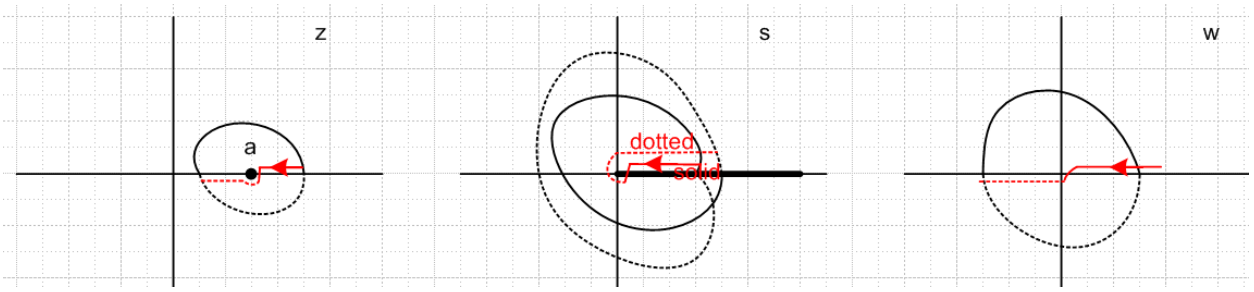

The z plane ant does not do anything dramatic, he can walk wherever he likes. As he moves into the lower half plane just before hitting point a, the s-plane tracker ant dives through the cut and switches from Sheet 1 (solid) to Sheet 2 (dashed). He has moved nice and smoothly from Branch 1 to Branch 2 of our function. At the end of the "little dive" segment in the s-plane, global phase there is 4π, so phase in w-space is 2π and we are just below the real axis. But then in s-space we wind back to phase 2π (on the dotted sheet), and so in w-space we also return to π phase.

These pictures are NON TRIVIAL. You have to stare quite a bit to convince yourself that the ant paths are correct.

Example 4a: $w = [\,(z-a)^2\,]^{1/2}$ Example 4 but with the s-plane cut taken to the left.

The first drawing above now becomes this

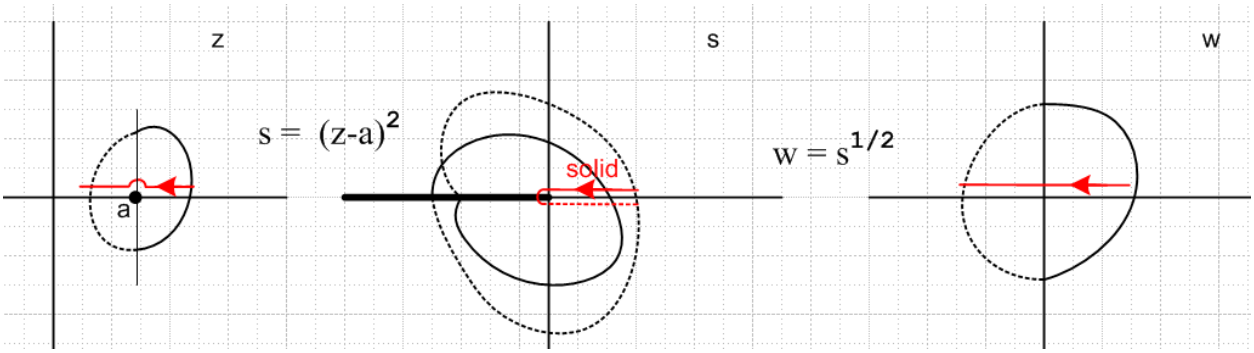

Only the names of the sheets have been changed to protect the innocent. The ant trails look the same. Here are the other two corresponding pictures:

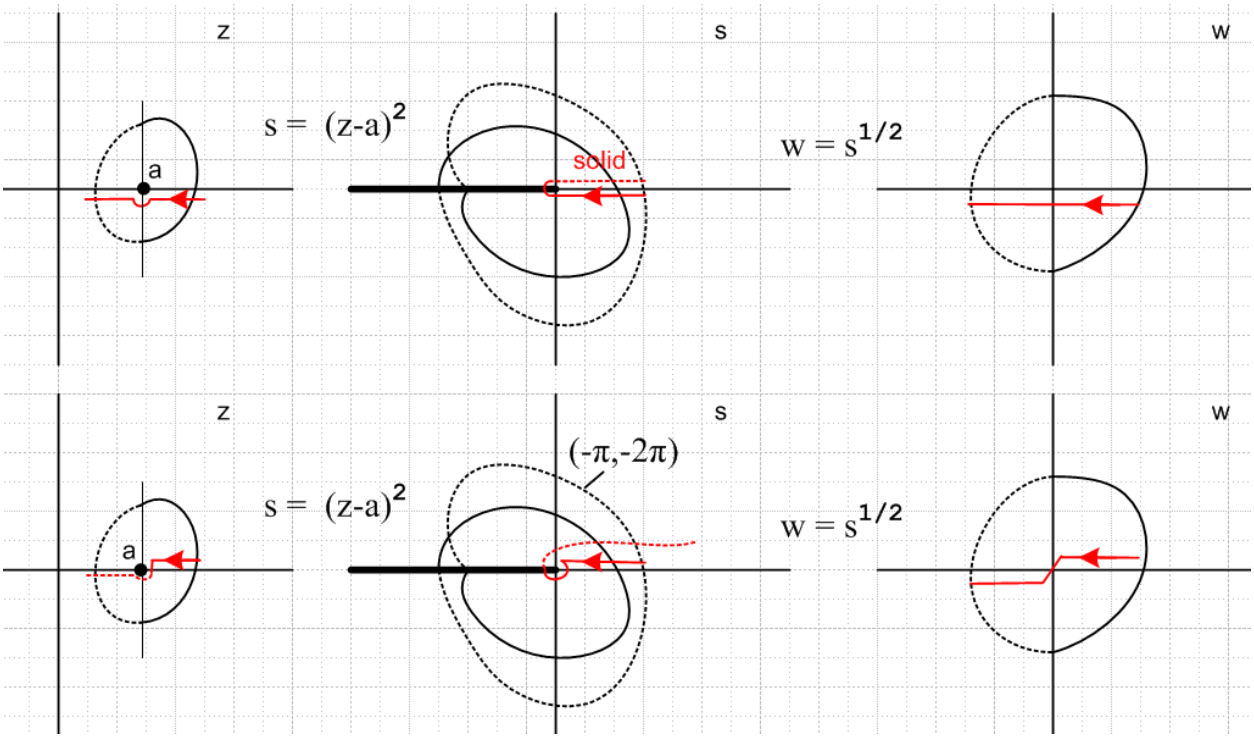

This is so much fun, let's try one more ant path:

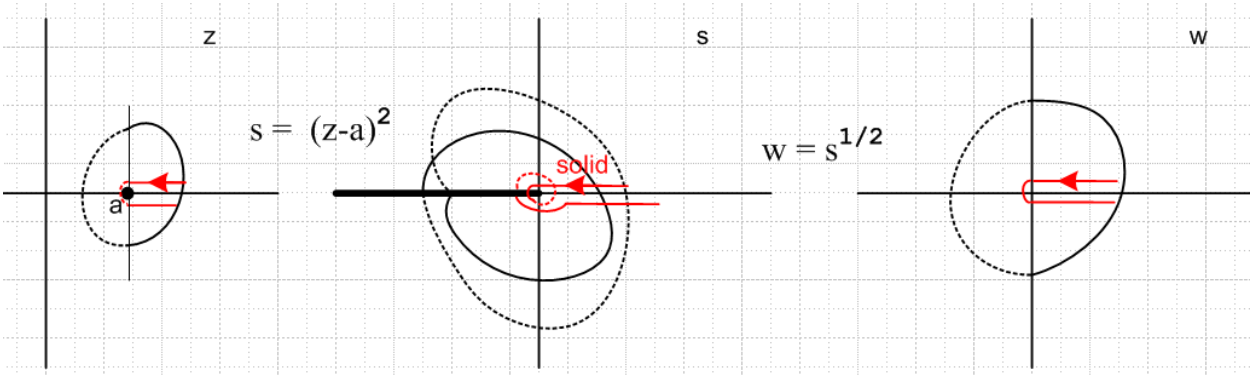

The z ant winds 2π worth of angle (ending up where he started), so the s ant winds 4π of angle, and the w ant is back to 2π of angle. (Angle of the vector from ant to either point a or the origin.)

Example 5: Product of two square roots: $w(z) = \sqrt{z-a}\,\sqrt{z-b}$

First, here is a picture, and we use the normal cuts-to-the-left "ant kinematics":

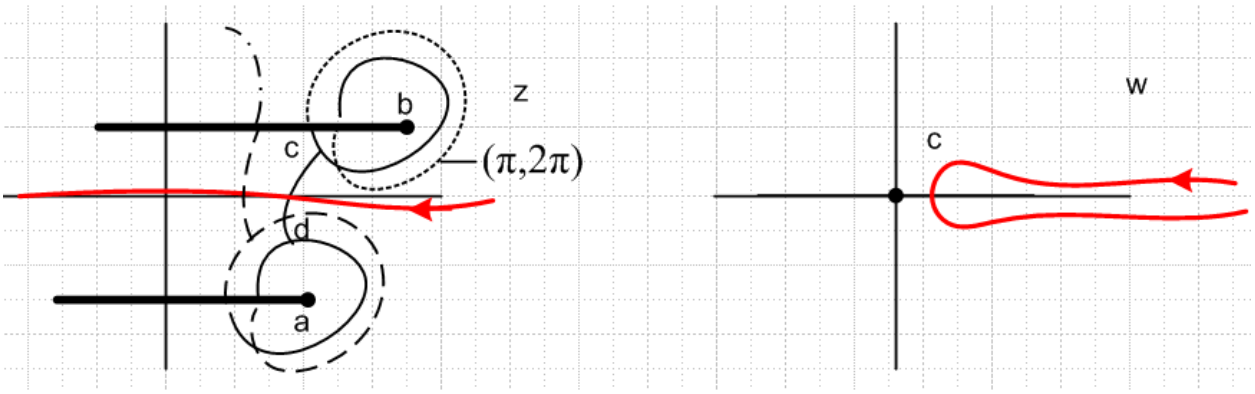

Each radical has a branch point and two sheets, so we end up with a domain with four sheets, and so we have four branches of our function. Each branch has the entire z plane as domain and the entire w plane for range. Recall for the single radical case the range was only half the w plane. But here, as you wander over the entire black first sheet in z, you can achieve any w space angle you want. Here are two examples. A z point far to the right maps to 0 angle in w space. But a z point far to the left and above both cuts maps to a point at the far left of w space.

I have drawn black ant paths in the z plane to suggest how you might get to the four sheets. To get to the fourth sheet, you have to dive through one branch point, and then through the other. I have shown some ant track on this fourth sheet as a dot-dash pattern.

I tried drawing the corresponding ant tracks in the w plane, but it is very hard to do because the phase angle in the w plane is half the sum of the angles of vectors z-a and z-b, so I give up on that.

Now for fun, let's imagine we run an ant coming right to left on the real axis in z space. The ant is running only on the First Branch domain which is the black one. It is easy to figure out the w ant's position at the start and end of the trip, and we know he does not touch the origin. At the start of his trip, the z ant has phase 0 and so does the w ant. At the end of his trip, the z and is at $+\pi$ phase relative to a (creating $\pi/2$ from that sqrt), and is at $-\pi$ relative to b (creating $-\pi/2$), so overall phase is 0, and same for the w ant.

I have shown the w ant staying in the right half plane, but in theory that is not necessary and might depend on the locations of the two branch points (or perhaps it really does stay in the right half plane).

Now consider another ant path which passes close to the two singularities, one at a time, in the domain: (branch points have moved, pay no attention...)

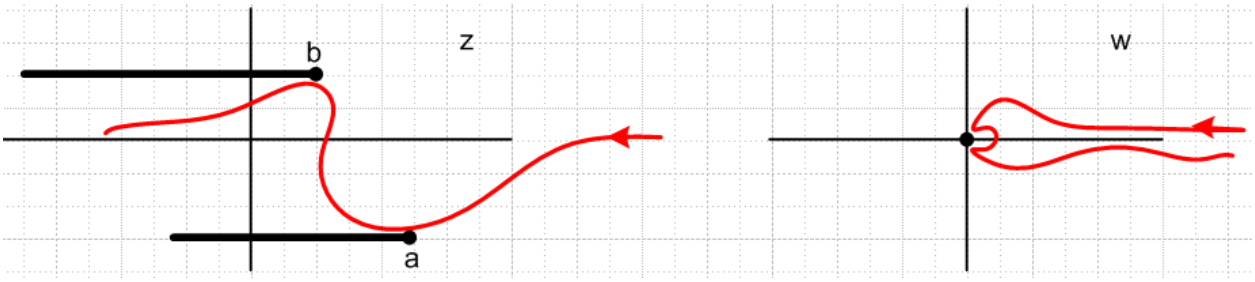

This causes two close encounters with the origin in w space. A

As our second last path, suppose the upper branch point is a+iz and the lower one a-iz and we are interested in the limit as $z \to 0$, so the branch points collide: [we have suddenly change the complex variable name to ρ, and introduced a z which is just a parameter.]

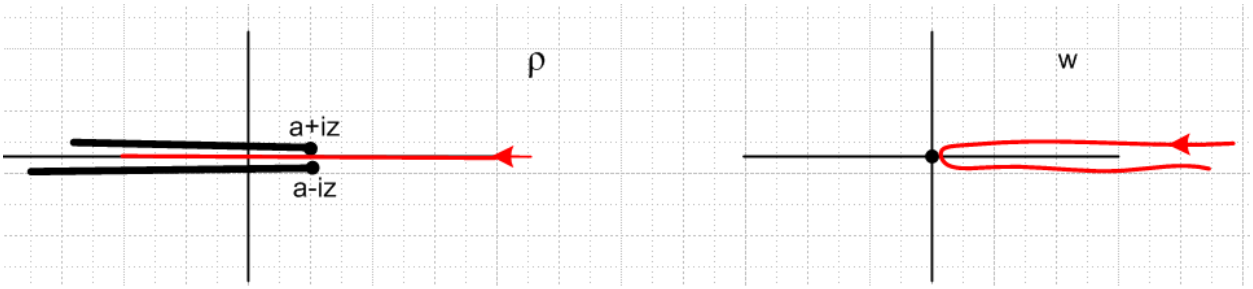

As the branch points actually collide, the ant -- when at that point -- finds himself on all four sheets at once and our function $w(\rho) = \sqrt{\rho-a}\,\sqrt{\rho-b}$ has the value 0, so nothing is "blowing up". The w ant follows the path shown.

And now for our last path picture:

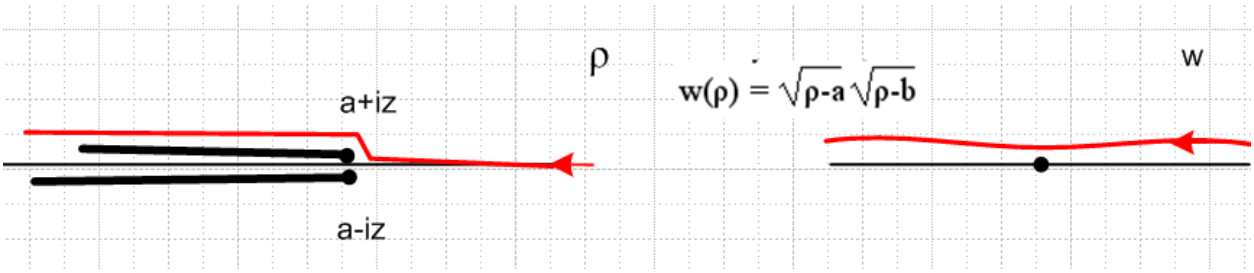

In this case at the end of the trip the ρ ant has phase $+\pi$ relative to both branch points, so the w ant has phase π. A similar thing happens if the ρ ant goes below both cuts. But if he goes between the cuts, then we get that "retrograde motion" of the w ant. a+θ

Example 6: Application to the charged disk potential (this is a somewhat "advanced" example)

The potential of a charged disk can be written in this manner:

$$V(x,y,z) = (q/a)\,\cot^{-1}(\xi) = (q/a)\,\sin^{-1}\left[2a \,/\, \left(\sqrt{(\rho-a)^2+z^2} + \sqrt{(\rho+a)^2+z^2}\right)\right]$$

where we now think of ρ as our complex variable of interest, and z is then just a parameter like a. The big question is interpreting the meaning of the square roots appearing in this formula. The first thing we do is rewrite things like this, factoring each radical's polynomial,

$$(q/a)\,\sin^{-1}\left[2a \,/\, \left(\sqrt{(\rho - [a+iz])(\rho - [a-iz])} + \sqrt{(\rho - [-a+iz])(\rho - [-a-iz])}\right)\right]$$

We shall be interested in what happens as we start ρ at some positive real value and bring it down past the point ρ = a and then below this point. In particular, we then want to know what happens as $z \to 0$. We see that our potential has four square root radicals which concern us. Here is our function of interest, and there are four branch points to think about:

$$W(\rho) = \sqrt{(\rho - [a+iz])(\rho - [a-iz])} + \sqrt{(\rho - [-a+iz])(\rho - [-a-iz])}$$

This is a little much to handle all at once, so let's just think about the first term. For our path of interest, the second term does nothing exciting (we have $0 < \rho < \infty$) because our path is far from the branch points of this term. So this is our main interest

$$w(\rho) = \sqrt{(\rho - [a+iz])(\rho - [a-iz])}$$

We see that the two branch points are mirrored in the real axis and pinch each other as $z \to 0$, as was discussed at the end of the previous example. So we repeat that picture here:

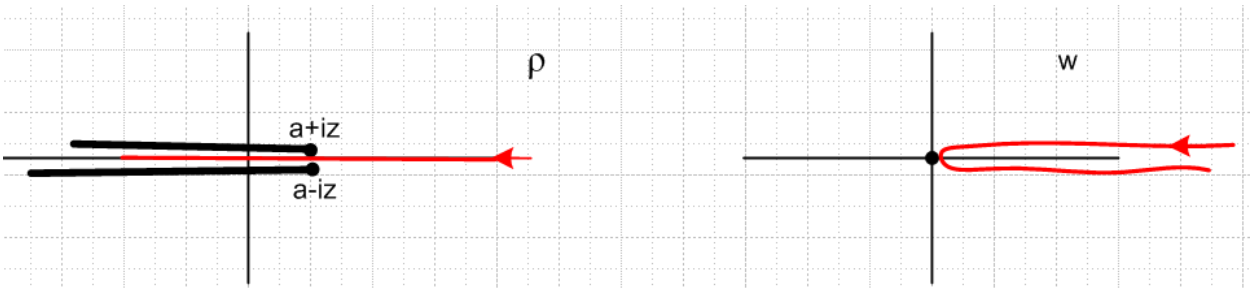

In the limit $z \to 0$, we are I think comfortable with the idea that w is a positive number for all values of ρ on the left red trajectory. Key idea is that our ρ ant goes between the branch points!

But here comes the Big Paradox. If we take the limit $z \to 0$ in our $w(\rho)$ above, we get this:

$$w(\rho) = \sqrt{(\rho - [a])(\rho - [a])} \quad = \sqrt{(\rho - a)^2}$$

and we suddenly have our Example 4a, which had this picture, which does not show "retrograde motion" of the w ant: (z in the picture is our ρ)

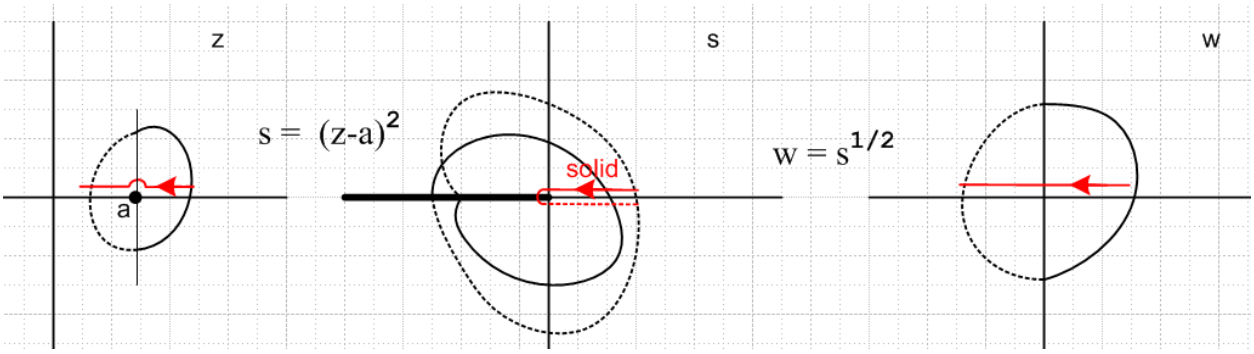

Well, this is really our previous situation with this picture

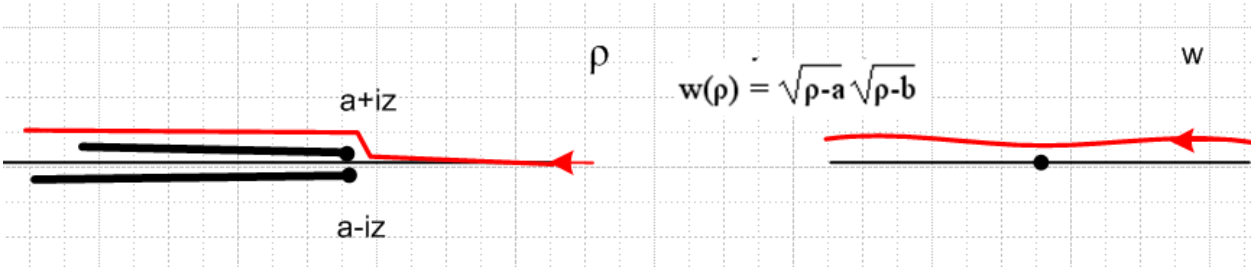

Here, if we allow z→0, the two branch points cancel each other out when the collide so there is no cut left at all in the ρ plane (the z plane above). Although there is a cut in s-space (not shown in our last picture above, but shown in the next to last one) there is no cut in w space.

So, here is the Big Point: we get that "retrograde motion" of the w-space ant because he went *between* the two branch points *before* and even *in* the limit. In that case, the two branch points don't "cancel each other out". The net effect is this, for ρ and a on the real axis,

$$\text{limit}_{z\to 0}\ \sqrt{(\rho - [a+iz])(\rho - [a-iz])} \ \rightarrow\ |\ \sqrt{(\rho - a)^2}\ |\ =\ |\,\rho - a\,|$$

The significance of this boundary for the charged disk potential is this. Go back to the given form,

$$V(x,y,z) = (q/a)\ \cot^{-1}(\xi)\ =\ (q/a)\ \sin^{-1}\left[2a\ /\ (\sqrt{(\rho-a)^2+ z^2}\ \ +\ \sqrt{(\rho+a)^2+ z^2}\ )\ \right]$$

The second radical is no issue, only the first. For ρ, a and z real, we can rewrite this as follows:

$$V(x,y,z) = (q/a)\ \cot^{-1}(\xi)\ =\ (q/a)\ \sin^{-1}\left[2a\ /\ (\ |\sqrt{(\rho-a)^2+ z^2}\ |\ \ +\ \sqrt{(\rho+a)^2+ z^2}\ )\ \right]$$

When $z \neq 0$, the absolute value sign has no effect at all, since the argument of the square root remains a positive number for all ρ, and we are on the first branch where the root itself is a positive number. So you can think of it either being there or not in this case. But in the limit, it must be there.

This then is how we are able to achieve a constant potential on the charged disk:

$$\rho > a \qquad |\sqrt{(\rho-a)^2}\ |\ +\ \sqrt{(\rho+a)^2} \ =\ \rho - a + \rho + a\ = 2\rho$$

$$\rho < a \qquad |\sqrt{(\rho-a)^2}\ |\ +\ \sqrt{(\rho+a)^2} \ =\ a - \rho + \rho + a\ = 2a$$

Here is a useful plot of the first term radical for different values of z.

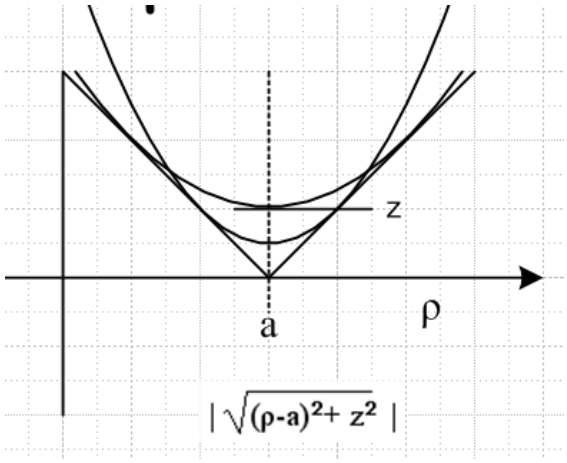

As z → 0, the parabola-like behavior near ρ = a approaches the sharp V shown when z = 0. For all values of z>0, both the potential and its slope (zero) are continuous at the ρ=a cylinder wall, indicating there is no charge density on it. Only at z = 0 do we get a discontinuity in slope of V, and that corresponds to charge density at the edge of our charged disk.

The following note added 2.12.10

Let's rethink the cases above with cut to the right using a different angle convention. In this different convention, we say that the "zero" of our angle always is opposite the cut direction, and positive angle is always a CCW rotation no matter what. Let's just see what happens with this convention.

Example 1: $w = z^{1/2}$

We think of the angle in the domain sheet as being in the range $(-\pi,\pi)$ with the zero to the left.

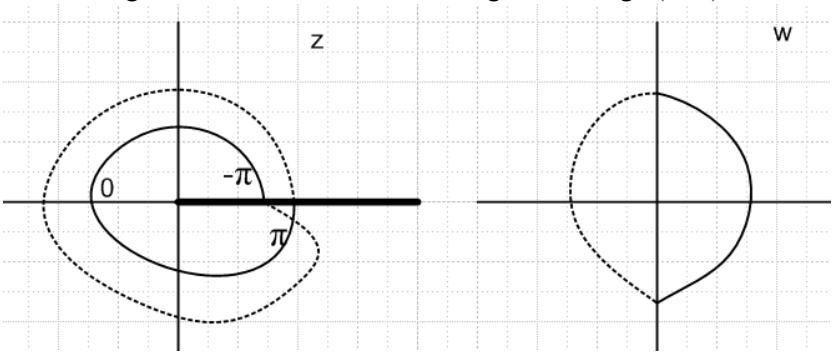

OK, I now see an immediate intuitive problem with this notation. If we set z = -4, we somehow expect that $z^{1/2} = \sqrt{-4}$ ought to be ± 2i. But in the above scheme, we have $z^{1/2} = \sqrt{-4} = +2$, and this then is how the principle sheet is defined. In other words , if we put z on the left real axis in the left picture, we then have $z = |z|e^{i0}$ and then $z^{1/2} = |z|^{1/2} e^{i0}$ and that then is why $(-4)^{1/2} = 2$. So this counter-intuitive notion I think is enough for me to rule out this method of defining angles, and to stick with the $(0,2\pi)$ method for Right cut situations.

Nevertheless, the above method has the *advantage* that it is the same no matter at what angle you pull off the cut. We always would be defining the Principle Sheet with angle zero opposite the cut. And another advantage is that the function is real on the uncut piece of the real axis, so it is real analytic.

But this then goes against the idea of "revealing" more of a sheet as you rotate the cut. As you rotate the cut, you are constantly redefining the principle sheet in this parameterization.

Another *disadvantage* is that in different planes, you are then having a different zero point for the angle. For example, in the w plane above, where is the angle zero located? I assumed it was to the right, not to the left as in the z plane. So then when you have multiple cuts, the zero of the angle is different for every cut. This is very confusion.

So I guess we have a standard location for the 0 of an angle for any cut pull off angle and that is an arrow going to the right and up a little. An arrow at 2:59PM is the zero of the angle always. Then we have different angle ranges for different cuts. So stick with things done earlier in this document!