A study of f(z)=sqrt(1+cos(z)) PhL 1.23.11

Part I : The analytic structure of cos(z).

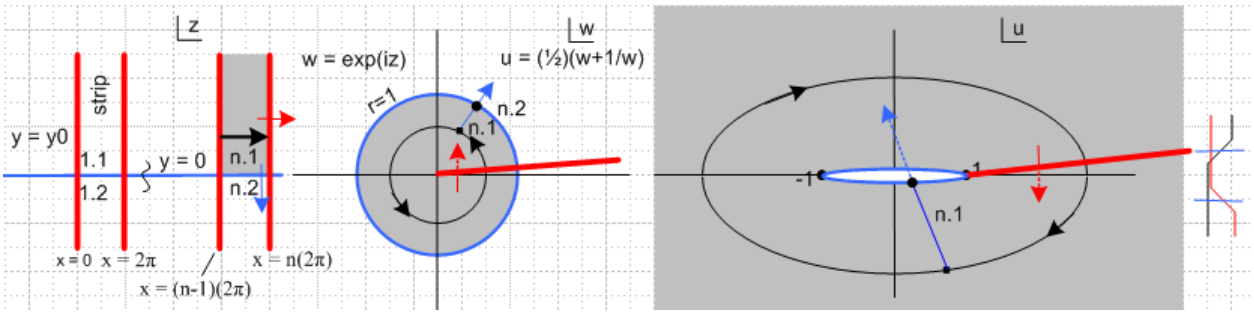

This is an immensely complicated situation that requires many words of description. We are concatenating two analytic mappings to form the composite function u(z) = cos(z). The first is seen to be $w(z) = e^{iz}$ and the second is $u(w) = (w+w^{-1})/2$.

(a) The mapping from z to w:

We start off by considering the upper half-strip between x = (n-1)2π and x = n(2π) shown grayed in the z plane. If we had n = 1, this would be the half strip labeled 1.1 in the z plane picture (label explanation coming soon). This upper half-strip maps to the interior of the unit circle shown in the w plane. The reason is that $e^{iz} = e^{i(x+iy)} = e^{ix}\, e^{-y}$ so when y>0 in an *upper* half-strip, $|e^{iz}| = e^{-y}$ is less than 1. The bottom of our gray half-strip is a blue line segment, and this maps into the blue unit circle in the w plane. If we cross over from an upper half-strip to the matching lower half-strip in the z plane, as illustrated by the blue arrow, we move from the inside of the unit circle to the outside as shown by the blue arrow in the w plane.

Now consider the black arrow in the gray region in the z plane. The mapping of this arrow's path is shown as the black circle in the w plane. The start of the black arrow maps to w = 0.6+iε say. If we were to extend the tip of the black arrow in the z plane, we pass through the red cut in the w plane.

So this brings up the labels. Upper strips are labeled x.1, and lower are x.2. These map to the inside and outside of the unit blue circle. The strip from (n-1)(2π) to n(2π) is called "strip n" and this is the first number of our n.x notation. So you can think of n.m as being (strip).(upper/lower).

Now, the red cut in the w plane has an infinite number of sheets, and each one maps back to a vertical strip in the z plane. So our first label can range from -∞ to ∞. The second label however only ranges from 1 to 2, since a strip only has two halves.

Comment: In the mapping z to w, the red cut is a "range cut" and therefore has no discontinuity. We can always take the locus of this cut and map it "downstream". Doing this, we get the red range cut in the up plane as shown. Like the one in the w plane, it has no discontinuity, it is just a place where Riemann sheets attach.

(b) The mapping from w to u.

Split the Word window so you can see the picture above while reading this section. The mapping shown as $u = (w+w^{-1})/2$ is famously tricky. A circle in the w plane maps into an ellipse in the u plane. Thus, we

see our black circle mapping into an ellipse. However, for a circle as shown inside the unit circle, the direction of motion gets reversed. To see this consider

$$w = Re^{i\theta} \qquad 2u = w+w^{-1} = Re^{i\theta} + R^{-1}e^{-i\theta} = (R+R^{-1})\cos\theta + i\,(R-R^{-1})\sin\theta$$

For $R< 1$ as for our black circle shown, for small θ we see that $(R-R^{-1}) < 0$ so u has a negative imaginary part, and that is why we have the reversal of rotation direction. For a black circle in w outside the blue unit circle, the rotation direction would not be reversed.

Now the set of all black concentric circles inside the unit circle in the w plane maps into a set of concentric ellipses in the u plane which exhausts the entire u plane. That is to say, the inside of the blue unit circle in w maps to the entire u plane, as shown in gray. The outside of the unit circle maps to a second "white sheet" of the u plane. Thus, the two sheets of the u plane are really labeled by our second index. An upper half-strip in z maps into an entire sheet n.1 of u, and lower half-strip to n.2.

The blue unit circle in the w plane maps into an infinitely thin blue ellipse in the u plane, which we have "pulled apart" a little bit. This ellipse tightly wraps the - 1 and +1 focal points. On the far right we show an "ant motion" picture as one crosses the pulled-apart blue ellipse to cross from one sheet to the other in either direction. Each half of the tight blue ellipse represents a cut in the u plane, so we have the slightly unusual situation of having two blue cuts lying right on top of each other. However, this does not seem to cause anything dramatic to happen. For example, if we track our blue arrow, we see that we just move through this cut in a "sensible fashion" from one sheet to the other sheet.

So the double blue cut in the u plane allows passage between sheets n.1 ↔ n.2.

But the u plane also has a red cut as shown, and passing through this changes the first label. If we cross this cut as shown by the red arrow, we move from sheet n.m to (n+1).m . This red cut has an infinite number of sheets, just as does its back-reflection in the w plane. In the z plane the back-mapped red cut in the w plane becomes the red vertical strip boundaries.

Part II : The analytic structure of $s(z) = \sqrt{a + \cos(z)}$

Now we are adding a third concatenation to our system above, $s = \sqrt{a+u}$, and we want to learn what happens. We know in the s plane that we have a two-branch new cut running from u = -a off to -∞. We shall draw this in green, and we want to see what it's back-mappings look like in the w and z plane. The green cut in the u plane is a "domain cut" relative to the final s plane, and as such has a discontinuity. As we map this domain cut back "upstream", we are going to find green cuts appearing in the w and z planes and these cuts will also have discontinuities.

Here is our new picture where we have perhaps a = 1.3 .

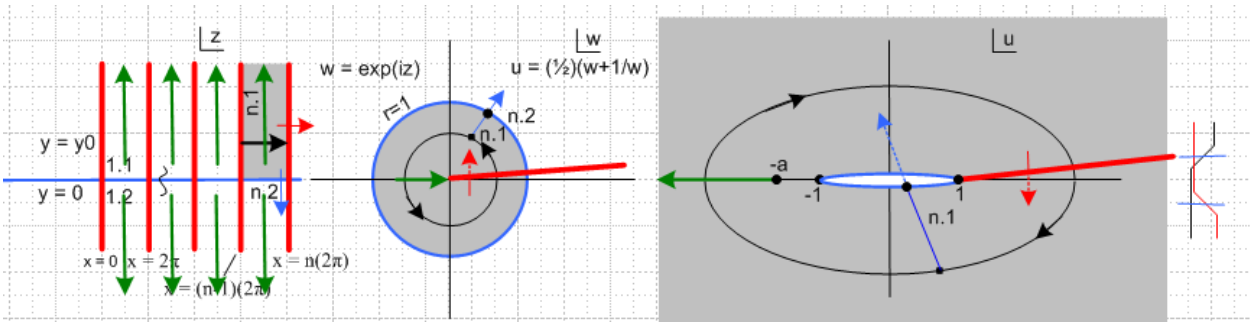

The u plane green runs from -a to -∞. In the w plane, this cut appears as a green arrow as shown, and it runs from some value like w = -0.75 to the origin w = 0. Is this green line a cut in the w plane? Yes, it is a cut! If we go through the cut in the u plane, we go to some other sheet, and if circle around and go through it again, we get back. So the green cut has only 2 sheets in the w plane, just as in the u plane. Perhaps we start on n.1.1 and we end up with n.1.2, where we have now added a third part to our sheet label. If we "go around" the u plane cut by passing vertically between -a and -1, we stay on n.1.1. So if we go through the cut in the w plane, we pass there from n.1.1 to n.1.2. Again: the green arrow in the w plane is a real cut there.

Now what about the z plane? The w plane green arrow back-maps as shown into an infinite set of green arrows in the z plane. And each really is a cut in the z plane! For each cut, we can either go around it, or we can to through it. If we go through it, we go from region n.1.1 to region n.1.2 on a second z plane sheet. The z plane now has two sheets, but these two sheets are connected by an infinite number of green cuts. You can move "down" to the second sheet by passing through any of these cuts in either direction from the starting sheet.

Now notice the following fact. If we start in the z plane at z = +iε and move to the right, we are moving above the blue axis and passing underneath all the green arrows. In the w plane that means we are doing a black circle outside the left end of the green arrow, and in the u plane we are doing an ellipse that misses the green arrow altogether. So doing this kind of z-plane ant trail, we never pass through the green cut in the u plane, and this means we never encounter a change in the sign of $s = \sqrt{a + \cos(z)}$.

What happens now if we let a move from 1.3 to 1.0? Here is the new picture:

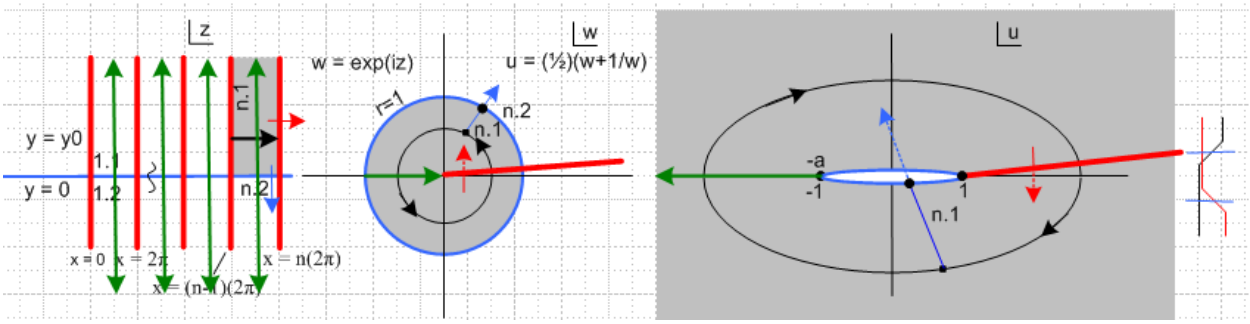

The tails of the green cuts in the z plane now touch, closing things off. Now if we try to march along to the right in the z plane starting at z = 0 +iε, every time we pass an odd-π boundary, we go do the other sheet, and $\sqrt{a + \cos(z)}$ has an overall sign change!

Now what if we go to a = 0.5, say. The green arrow start on the u plane touches both blue cuts, so we think of it extending onto both of them. In the w plane, the arrow start grows little wings that go both up and down the blue circle a ways. And in the z plane, the start end of each arrow grows a short horizontal component going off both directions on the blue axis. The trip starting at z = 0+iε is not any different that it was with a = 1, because we have to dive through every single cut on our path, and we get alternating sign changes. This path we can call z = x + iε as x runs say from 0 to ∞ .

Suppose we instead run along the path z = ε + iy with y going 0 to ∞. In the w plane we are then moving radially inward starting on the blue circle at w = 1+iε just above the red cut, going all the way to the origin. In the u plane we start on the blue cut branch point u = 1 and move off to the right, but below the cut. We never get involved with the green cut in any plane. I show such a path here with a new black arrow appearing in all three planes.

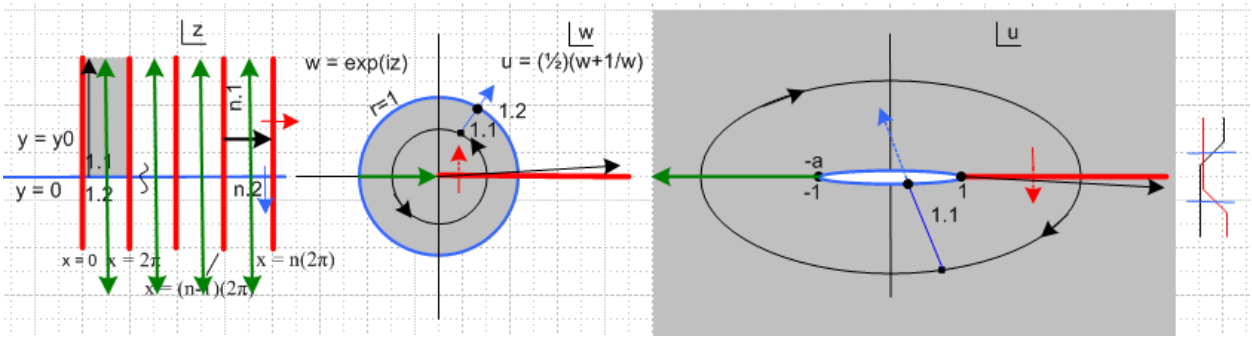

Our "principle sheet" in the u plane we are saying is 1.1 (perhaps 1.1.1 relative to the green cut), and this corresponds to the gray half strip in the z plane.

Part I : review of the analytic structure of cos(z).

Part I : review of the analytic structure of cos(z).

Luckily, getting from z to cos(z) is pretty well understood by me from Ahlfors reading which I updated today. Here is the lay of the land on that subject:

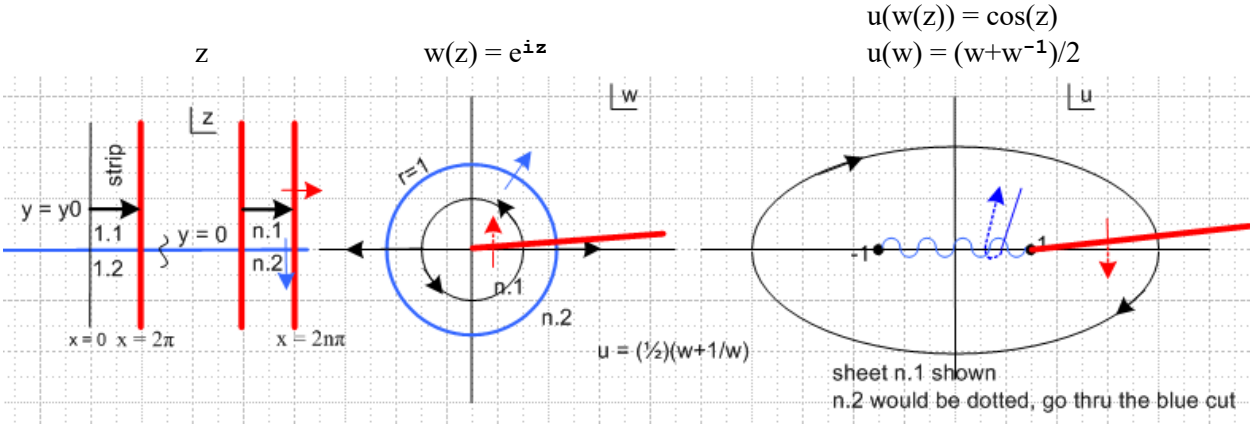

Our interest is what happens when we run variable z from a to a+2π where a is some constant in the range (0,π). Here is the above picture modified to this purpose,

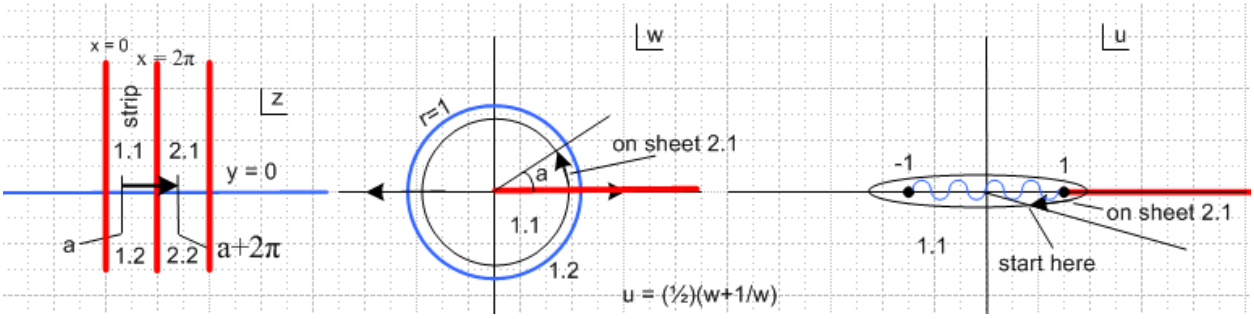

The black arrow runs our z over range (a,a+2π) and we give z a tiny positive imaginary part. This causes the black circle in w to be just inside the unit circle, with the last part of the circle in region 2.1 of the next sheet. This in turn maps into a sucked-down ellipse which mostly is on sheet 1.1 but the last part is on sheet 2.1. For any a in the range (0,π), things are qualitatively the same. Notice that when the black arrow in z crosses the value x=π (not marked, the middle of the first strip), we are at the far left part of the black circle in w and of the black ellipse in u. The ellipse crosses the real axis at $u_x = -1-\varepsilon$.

[If we had our z arrow be just south of the real axis starting in region 1.2, the black circle would be starting in region 1.2 just *outside* the blue unit circle and we would be traversing it in the opposite direction from the same starting point. The ellipse however looks exactly the same, with the same traversal direction as shown. The ellipse would be starting on sheet 1.2 with tail end on 2.2.]

Here are some pictures which show the sheet transitions for paths like the ellipse in u:

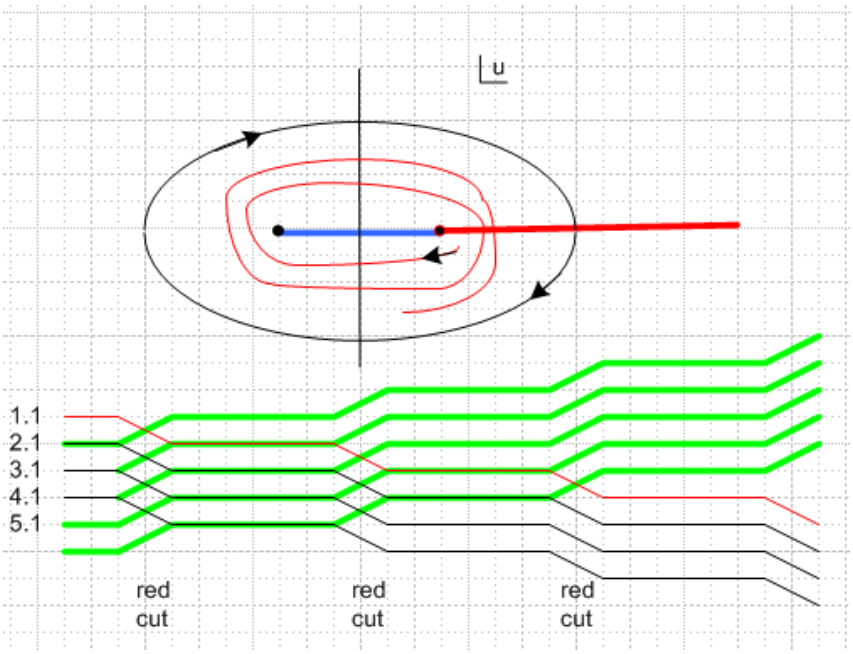

The descending paths in thin line match the spiral shown. If we were to run the spiral the other direction, we would have the thick green ascending paths.

Here are <u>the main points of our discussion so far</u>:

(1) For the function u(z) = cos(z), the *domain* is the entire z plane, and there are no cuts there, but there are certain *regions* bordered by blue and red lines. We know cos(z) is analytic in the entire z plane. It turns out that each of these rectangular domain regions maps into *an entire sheet* of the *range* plane u. We can move between these various sheets of the range by going through the red and blue cuts. The range plane has these two cuts.

(2) As we move z along (a,a+2π), when we reach z = π we are crossing the real axis upward in u space just to the left of the point -1 ! So far, nothing dramatic happens during that crossing because there is no cut at the location of the crossing.

Part II.

Now consider adding another stage to our function pipeline

$$s = \sqrt{1+u} \quad = \sqrt{1+\cos(z)}$$

What does this do to the discussion above? First of all, we suddenly have a new cut in the u-plane which I will draw green -- and this green cut has two sheets. Here is our new picture

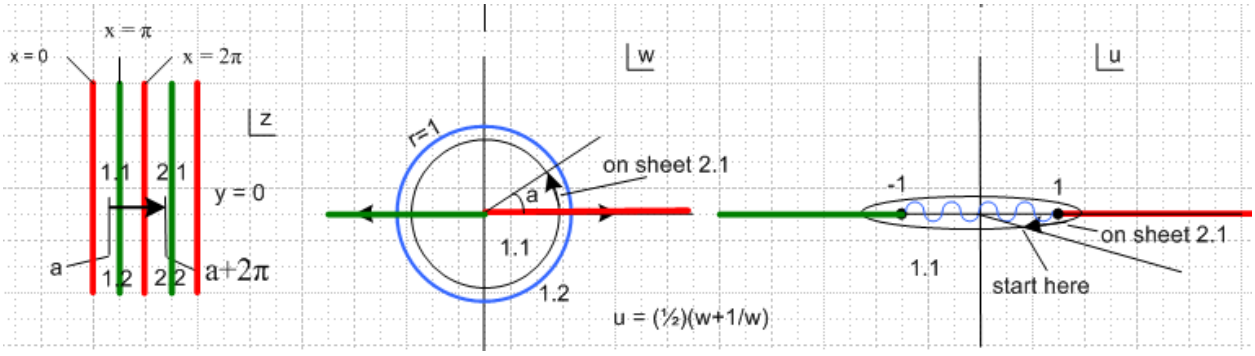

Time to stop. One day was not enough for me to understand this stuff, so it goes.

Question for next time:

"What is the cut structure in the z plane for the function $s(z) = \sqrt{0.5 + \cos(z)}$? "

We certainly seem to have a branch point when cos(z) = -0.5 which means z = 120 deg = 2π/3.

Consider this voyage in the z plane:

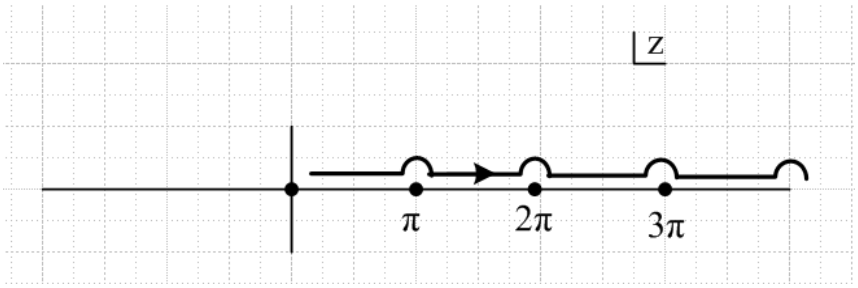
z
π
2π
3π