Cylindrical coordinate Atoms PhL 3.10.10

This is a very early doc and its results are better stated elsewhere. See "Sturm Liouville atoms in various coord systems.doc" for example.

1. Cartesian Atoms. First, let's recall the "atom situation" from "charged disk by Smythe fit..." for Cartesians. If you try a solution of the form $\sin(k_x x)\sin(k_y y)\sin(k_z z)$ the Laplace says $k_x^2 + k_y^2 + k_z^2 = 0$, so you have to take at least one direction as "exponential", and perhaps write $\sin(k_x x)\sin(k_y y)\exp(k_z z)$. So the idea is that you can be oscillatory in at most 2 of the 3 dimensions, and you will then be exponential in the third. This is somehow the more global statement of the fact that if you cup up in two dimensions, you must cup down in the third. Maybe this is a simple derivation:

$$f_{xx}/f + f_{yy}/f + f_{zz}/f = 0$$

where we avoid points where $f = 0$. If $f_{xx}/f < 0$, then you are cupping toward the axis which means oscillatory. So if two of the three are this way, the third must be the opposite. I imagine you could have two exponential and one oscillatory, but this seems to be a less frequent case in problems. So in the Cartesian world, we distinguish the cases perhaps by $\sin(k_x x)$ versus $\sinh(k_x x)$ so trigs are oscillatory and hyperbolics are the exponentials.

2. Spherical atoms. The most common atomic form here is shown on the left (picture is from "questions about Legendre...").

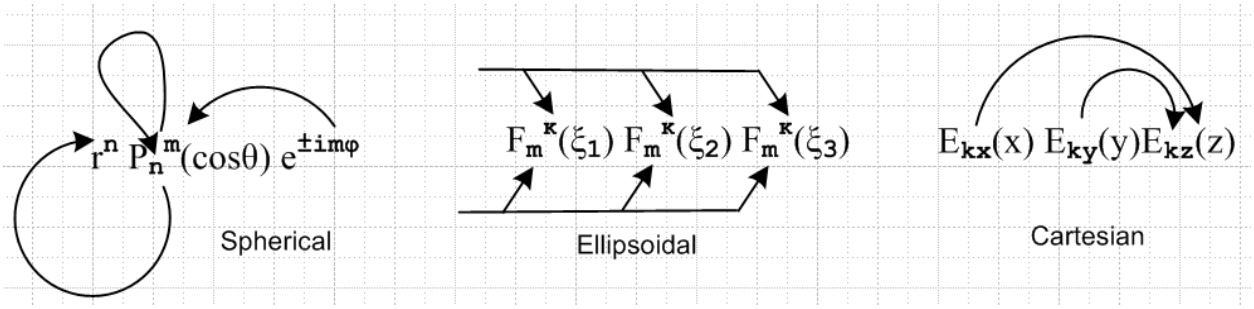

In this case, we have oscillatory in θ and φ, and "exponential" in r , which in this case means powers. Basically, by "expo" we mean $f_{ii}/f > 0$, whatever f_{ii} might mean. The other pictures here show two other coordinate systems, and the arrows show "quantum number linkage". Note that other atomic forms exist, but the one shown on the left is the most common situation one runs into. You oscillate in both directions on the spherical surface and you expo in the radial direction.

3. Cylindrical atoms. So once again we usually have $e^{\pm im\varphi}$ if we have full azimuth, and then here is one common atomic choice:

$$e^{\pm kz}\,[\,J_m(k\rho), N_m(k\rho)]\;\; e^{\pm im\varphi}$$

which we can compare to

$$r^{n,-n-1}\ [\ P_n^m(z),\ Q_n^m(z)]\ e^{\pm im\varphi}$$

So in the selected cylindrical case we have expo in z. But I think a different choice is this

$$[\ K_m(k\rho),\ I_m(k\rho)]\ \ e^{\pm ikz}\ e^{\pm im\varphi}$$

where we have moved the expo from z into the ρ coordinate.

The J and K are both oscillatory at large ρ (Jackson page 72), so J and K are more like the functions $P_n^m(z)$ and $P_n^m(-z)$. If you need expo far away decay, you form a Hankel Jackson p 71 and throw in imaginary argument, and this is then the K function. See Jackson page 75 on I and K and how related to J and $H^{(1)}$.

I suppose one could make a systematic comparison of the atomic forms with regard to first and second kind, and which coordinate is expo and which is oscillatory. Here by the way are the oblate spheroidal atoms I used a lot

$$[\ P_n^m(i\zeta),\ Q_n^m(i\zeta)]\ [\ P_n^m(\xi),\ Q_n^m(\xi)]\ e^{\pm im\varphi}$$

and in this case, the first (my p and q) are the expo functions.

4. The three 1D differential equations. See "essay on separable coordinates.doc". One idea there is that usually two of the three ODE's can be regarded as SL problems which each cause quantization of one of the quantum numbers. In sphericals, it is the full range (-1,1) for z which forces n = integer, and of course azimuth forces m = integer in those cases, and then $P_n^m(z)$ has integers, and the "n" is then just carried into the third dimension $r^{n,-n-1}$.

How does this work out in cylindricals? Usually m = integer in the same way. But then I think the most common situation is that the ρ equation causes quantization of k, perhaps $J_m(k_i a) = 0$ at some cylindrical radius ρ = a to perhaps make a potential or amplitude be zero (drumhead). Then this k is carried into the z dimension. I think there are situations, however, where we don't get quantization of k and it remains a continuous variable. An example is Jackson p 80 (3.170) for the charged disk. His atomic form has m = 0 and the J is picked since finite at the origin, so this is just a Smythian Form for this problem.

5. Preliminary ponderings on the Green's function for a cylindrical ring. Smythe on page 189 treats the case of a Green's charge *inside* a hollow cylindrical ring, *not* meaning in the hole in the middle of the ring. But I want the Green's charge to be inside the hole, or outside the ring, but not inside the metal surface, so I am doing a different problem. But I can use the same symbols Smythe uses. And the same method.

First, here is a picture showing the case where the Green's charge lies inside the math cylinder defined by the hole in the ring. That is to say, I assume that b < d.

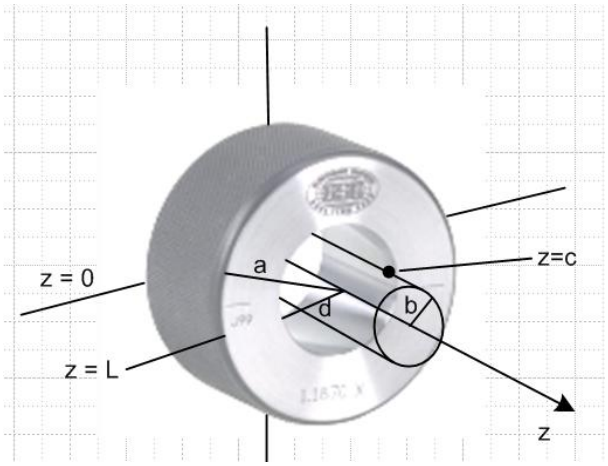

If we follow Smythe's method, we need to construct a Smythian Form for this problem which I see as a *non-trivial* problem. We know that V = 0 everywhere inside the ring and on all the walls of the ring. But there are in total 16 regions to worry about as suggested by this picture where I have put the Green's charge on the left of the right-side picture, which we assume is z = c > 0 and

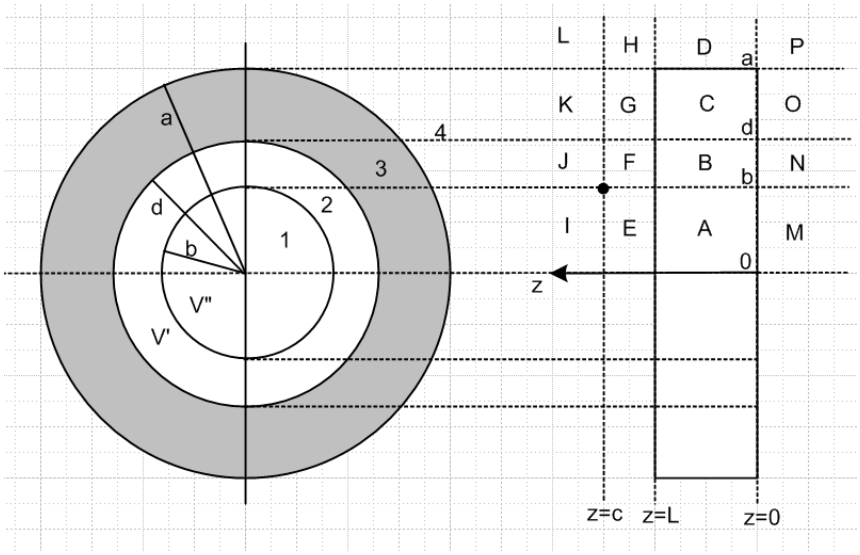

My 16 regions are A,B,C....P. We know that V = 0 in region C. What else do we know?

- In regions M,N,O,P (where z < 0) we expect to have $e^{-k|z|}$ so we get expo decay.
- In regions I,J,K,L (where z > c) we expect to have $e^{-k|z|}$ so we get expo decay.
- In regions P,D,H,L we expect to have $K_\nu(k\rho)$ or $H^{(1)}_\nu(k\rho)$ to get expo decay in ρ
- In regions M,A,E, I we expect to have $J_\nu(k\rho)$ or $I_\nu(k\rho)$ to get finite at ρ = 0.

This could potentially be a very difficult problem! There are a large number of region boundaries to "worry about". Presumably in all 16 regions we will have cos(mφ) as our φ dependence because each region is azimuthally closed. So at least we have only z and ρ to worry about (in 16 regions!) .

Consider the I/E interface for variable z. In I we must have e^{-kz} . But in E what could we say? It could be a combination of e^{-kz} and e^{+kz} . But what about $e^{\pm ikz}$? My gut feeling is this: since we know we must have real expo decay, we should "go with" the following atom system

$$[\, J_m(k\rho),\, H^{(1)}{}_m(k\rho)]\;\; e^{\pm kz}\, e^{\pm im\varphi}$$

where for Bessel's I choose J for small ρ goodness (Jackson page 72) and $H^{(1)}$ for large ρ. But one problem we then have is that since J and N are real, $H^{(1)}$ is complex Jackson p 71. So this is a puzzle that requires solution up front in making any forms. In region P, we need decay in both z and ρ and we need to be real, so how do we do that? What is the Q function in the Bessel world?

So enough for this problem at least in this document.

6. Potential of a point charge in Cylindrical coordinates?

I need to do more reading, especially in Smythe, before I can even ask this kind of question. // I am now ready to do this, and will put the results into a "1/R doc".