The Projected Area Theorem PhL 2.17.12

This arose in Lai chapter 4.

Theorem: Let flat area patch 1 of arbitrary shape lie in a plane with normal $\mathbf{n_1}$. Let area patch 2 be some other and larger area patch with normal $\mathbf{n_2}$ whose *projection* onto the plane of area patch 1 is precisely area patch 1. So the smaller patch 1 is the projection of the larger one 2 onto the plane of the smaller one. The claim is that the ratio of the areas is given by $A_2/A_1 = |\hat{\mathbf{n}}_1 \bullet \hat{\mathbf{n}}_2|$.

I don't know if this little "theorem" has a name, I could not find it in a quick web search.

Proof: if patch 2 is at some obscure 3D angle relative to patch 1, the proof is not trivial at least to me. I place the smaller patch in the x-y plane and hover patch 2 over it as in this picture. I draw these two large patches as quadrilaterals but they could have any shape, as long as the lower is the projection or shadow of the upper one.

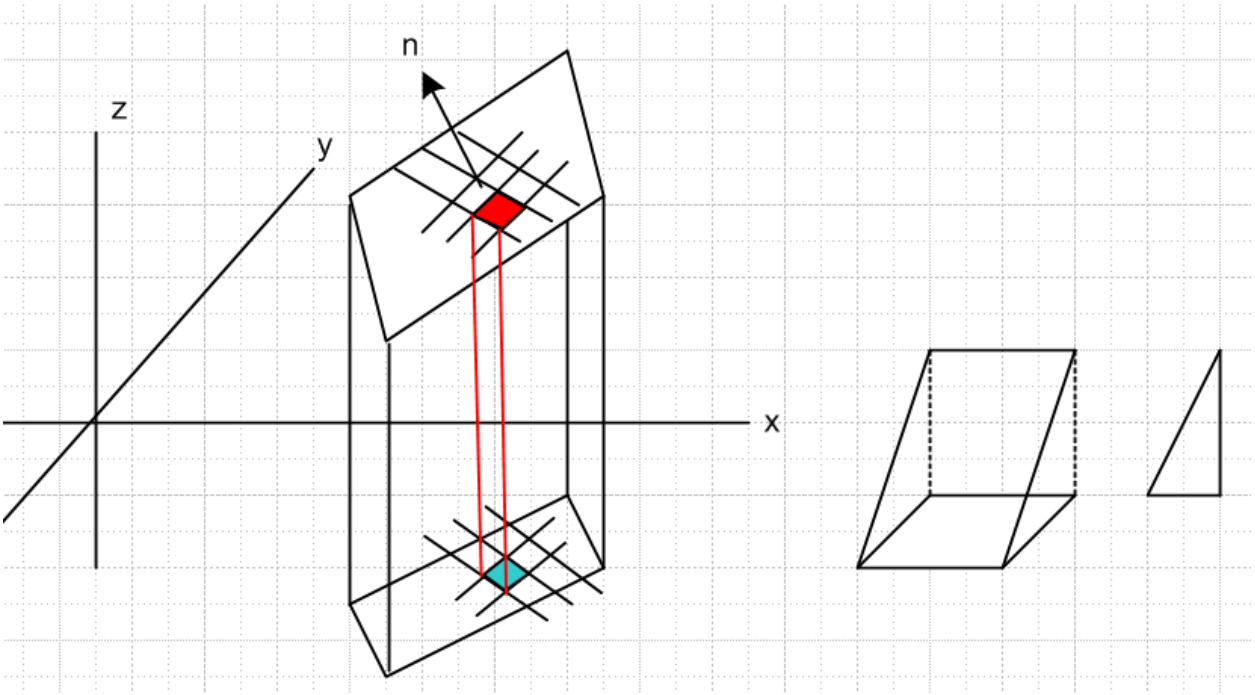

Now create a mesh of square tiles on the lower area and draw its image mesh on the upper area. Each set of lines of the upper mesh are parallel. If they were not, they would meet somewhere and then the projected lines would meet in the lower area and then it would not have a square mesh. Then slowly rotate the lower mesh until the lines in one direction which define the upper mesh become *parallel* to the x-y plane. This is obviously possible since as you do this rotation, all the (parallel) lines of the upper mesh rotate "all the way around" and there must be some point where they are parallel to the xy plane.

Once this position is achieved, consider one pair of matching tiles. Translate the upper one down vertically so that one of its edges coincides with the matching edge of the lower tile. We know this matching is possible because these edge segments are parallel and with the red lines above form a parallelogram. We then have a little hinged object where the lower object is a square tile, and the upper

object (the upper tile) is a rectangle whose projection is that square, as shown in the insert. The upper tile must be a rectangle because it connects to a square on the bottom and a vertical rectangle on the back. We can then turn this hinged object sideways (rightmost picture above) and then it is easy to claim for these two tiles that $dA_2/dA_1 = |\hat{\mathbf{n}}_1 \bullet \hat{\mathbf{n}}_2|$. We then reach this conclusion for any matching pair of tiles and so it applies for the larger areas as well, where as usual edge effects can be made as small as necessary.