Stakgold Chap 7 raw 3 Notes PhL started 7.19.11

These notes are for the Vol II text starting page 281, and will hopefully cover the remaining 40 pages of Chapter 7.

Section 7.13 Half-plane excited by a line source or a plane wave (281) 2
Description of the Problem. 2
Aside: Relating 2D to Extruded 3D: 4
Decompose g = g1 + g2. 4
What is the g1 solution? 4
What is the g2 solution? 5
The cosine angle conditions: 5
Technical details of the g2 rewrite. 6
The Meaning of the Source and Image Source. 7
Plane Wave Excitation in presence of the half plane. (285) 9
A Time Dependent Problem Example: Make the line source be pulsed at t=0. 14
Exercises: The Second Wave / Helmholtz Midterm Exam 18
Exercise 7.31 (290). 3D Helmholtz Green's Function for point charge on +z axis, sphericals 18
Exercise 7.32 (290). Same 3D as above, but replace the z-axis point source with a ring source. 18
Exercise 7.34 (p 290) 2D Helmholtz Green's Function outside a circle on which g=0. 19
Exercise 7.35 (p 291) Repeat previous problem using r eigenfunctions instead of θ ones. 19
Exercise 7.36 (p 291) 2D Helmholtz Neumann Green's Function in slab with ring source. 20
Exercise 7.37 (p 291, read only) Find temp inside a slab with Dirichlet initial conditions. 21
Exercise 7.38 (p 291) Waveguide 3D Helmholtz Green's Function Problem. 21
Exercise 7.39 (p 292) Induced Helmholtz current on half-line with point source off left end (2D). . 21
Exercise 7.40 (p 293, read only) Induced current on half-line due to incident plane wave (2D) 22
Exercise 7.41 (p 293, read only) Redo the half-line problem for Neumann instead of Dirichlet. 22
Exercise 7.42 (p 293, read only) Sound wave interface between two media. 22
Exercise 7.43 (p 294, read only) Solve the 3D Helmholtz sphere with q(x) distributed source. 22
Section 7.14 Exterior Helmholtz Solutions (294) 23
Radiating Exterior Dirichlet Problem. 23
Section 7.15 The Scattering Problem (299) 24
Plane Wave Excitation 27
Scattering Cross Section 28
Final Exam Part I: (the last 4 problems are after the WH section below) 31
Exercise 7.44 (p 326, read only). Surface approach, extra term, Fred 2 instead of Fred 1 for I. 31
Exercise 7.45 (p 327, read only) Same idea on a shell surface, getting I+ and I- separately. 31
Exercise 7.46 (p 327, partial) Redo scattering theory for Neuman BC on scatterer surface 31
Exercise 7.47 (p 327, read only). 2D scattering from a circle-shaped u=0 scatterer. 31
Exercise 7.48 (p 327, read only). More on 2D scattering from a circle. 31
Exercise 7.49 (p 327, read only) Point charge off end of half-plane (a 3D problem) 32
Exercise 7.50 (p 328, read only) Plane wave hits u=0 screen with aperture head on, 3D problem, . 32
Exercise 7.51 (p 328, read only) Repeat above with Neumann screen and aperture. 32
Exercise 7.52 (p 329, read only) A diffusion problem with absorption. 32
Exercise 7.53 (p 329, read only) 2D Neumann partially blocked waveguide problem. 32

Exercise 7.54 (p 330, read only) Compute the integral shown p 325 B. 33
Exercise 7.55 (p 330, read only) Convert the Example 1 integral equation to ODE and solve. 33
Exercise 7.56 (p 330, read only) Half line with plane wave from above, use WH method. 33
Exercise 7.57 (p 331, read only) Solve a certain 2D Helmholtz problem using the WH method. 33
Section 7.16 The Wiener-Hopf Method (311) 33
Interval (-∞,∞) 33
Interval (0,∞) 34
Aside on Liouville's Theorem. 34
Outline of Weiner Hopf. 34
A simple paradox and its resolution. 35
Sum Splitting (316) 35
Quotient Splitting (318). 36
Examples of Wiener-Hopf (318). // last section of Chap 7 !!! 36
Example 1: an academic example. 36
Example 2: The cylinder source half-plane problem revisited. 43
Final Exam Part II: (four WH related problems) 60
Exercise 7.54 (p 330, read only) Compute the integral shown p 325 B. 60
Exercise 7.55 (p 330, read only) Convert the Example 1 integral equation to ODE and solve. 60
Exercise 7.56 (p 330, read only) Half line with plane wave from above, use WH method. 60
Exercise 7.57 (p 331, read only) Solve a certain 2D Helmholtz problem using the WH method. 60

Section 7.13 Half-plane excited by a line source or a plane wave (281)

The plane wave special case comes in the next subsection, we are now doing the line source +half-plane problem.

Description of the Problem. Consider this 3D situation of a plane parallel to a wire source:

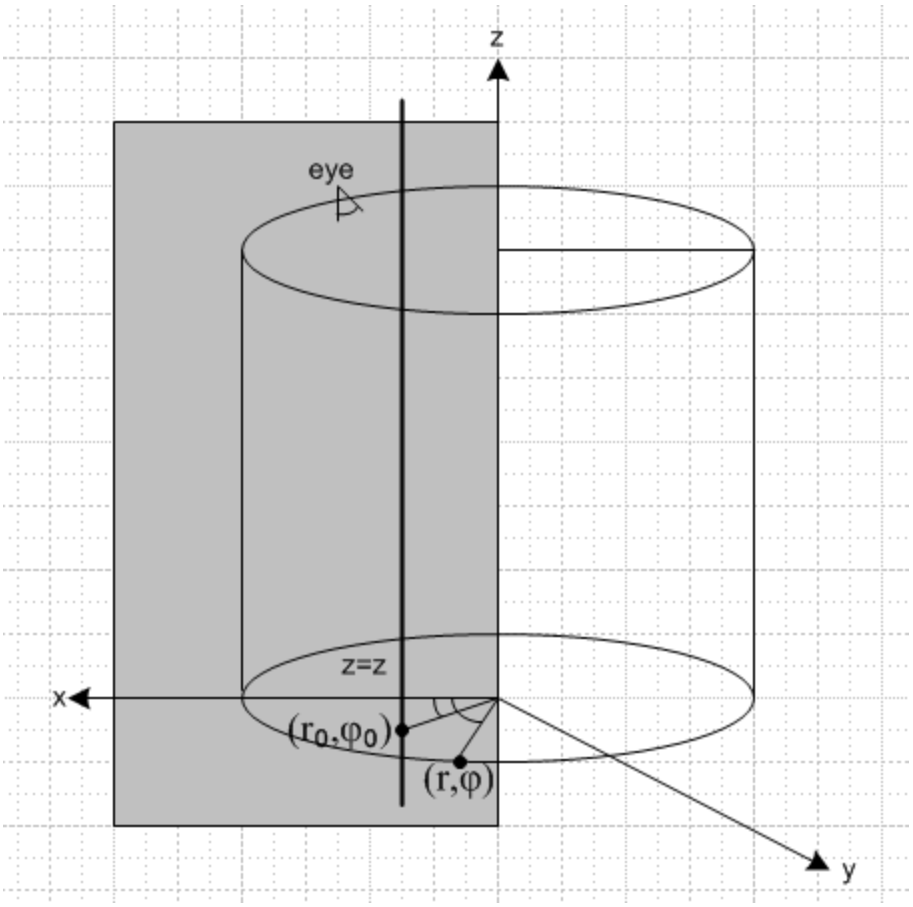

The half plane is attached to the z axis of a cylindrical coordinate system and a "wire" or 3D line source runs parallel to the plane as shown. The half plane BC boundary lies in the y=0 plane as shown, so runs along the + x axis. The location of the line source can be expressed in terms of r_0 and φ_0 as shown. The origin of the coordinate system lies somewhere below the bottom of the picture, so the bottom of the cylinder shown here lies in the plane z = z. Now in this 3D scene, put your viewing eye somewhere on the upper z axis and look down at the z=z plane. Orient your eye such that the y axis goes "up" and then the x axis goes "to the right". You then get Stakgold's Figure 7.10. We put an observation point at (r,φ) in the z = z plane and regard this as a fully general observation point due to the symmetry of the problem. We could imagine an image point of the source point (r_0,φ_0,z) located behind the half plane at $(r_0,2\pi-\varphi_0,z)$.

Our problem is to compute the solution $u(r,\varphi)$ of this Helmholtz problem with the linear source and u=0 on the half plane. We do this by solving the 2D problem shown in Figure 7.10.

Classic Solution to the Problem. The 2D Helmholtz Green's PDE is stated in 7.206 (including g = 0 on the half plane's two sides). We know that the separated equations are as in 7.160. We "start" with φ and we know that the Φ solutions must be as in p 282 B, since we want u = 0 on both sides of the half plane, which means $\varphi = 0$ and $\varphi = 2\pi$. [Our 2D problem is to find the "Helmholtz Green's Function" for a *point* source in the presence of a half *line* on which u = 0 as the boundary condition.] Applying the Fourier Series projection onto the PDE gives us an ODE Green's problem as in D with variable r. Stak then solves this for its little 1D Green's called g_n "as usual" and gets result F and this then gives the solution as 7.207 which agrees with our infinite wedge solution found earlier in this chapter. This 2D problem is

simply the 2D Helmholtz infinite-wedge Green's Function problem with $\psi = 2\pi$. The solution is of the form $g = \Sigma_{n=1}^{\infty} g_n \sin(n\varphi/2)$.

Aside: Relating 2D to Extruded 3D: Imagine a 2D Green's problem with a point charge q and solution $u(r,\varphi; r_0,\varphi_0; q)$. Imagine an extruded matching 3D problem with solution $v(r,\varphi,z; r_0,\varphi_0,z_0; \kappa)$ where κ is charge per unit length. How are these solutions related? We first state the two Helmholtz problems

$$(\nabla_{2D}^2 + \lambda)\, u(r,\varphi; r_0,\varphi_0; q) = q\, \delta^{(2)}(\mathbf{r}-\mathbf{r}_0)$$
$$(\nabla_{3D}^2 + \lambda)\, v(r,\varphi,z; r_0,\varphi_0,z_0; \kappa) = \kappa\, \delta^{(2)}(\mathbf{r}-\mathbf{r}_0)$$

But our assumption is that v cannot depend on z or z_0 due to symmetry, so we really have

$$(\nabla_{2D}^2 + \lambda)\, u(r,\varphi; r_0,\varphi_0; q) = q\, \delta^{(2)}(\mathbf{r}-\mathbf{r}_0)$$
$$(\nabla_{2D}^2 + \lambda)\, v(r,\varphi; r_0,\varphi_0,; \kappa) = \kappa\, \delta^{(2)}(\mathbf{r}-\mathbf{r}_0)$$

If we want these to be the same PDE, we must choose $\kappa = q$. The idea is that we really want to think of a thin dz slice of the 3D problem on the second line and make that be our 2D problem. In this case, the effective point charge of this slice 2D problem would be $dq = \kappa dz$ (integrate over a little box). This is why κ is the charge per unit length and κdz is then the charge. In the second line above, the source must be a 3D source with units of ρ, that is, Q/L^3 . We get that by having $\kappa = Q/L$. The units of u and v are not the same, we might note. The u equation says $L^{-2}u = QL^{-2}$ so dim(u) = Q. The v equation $L^{-2}v = QL^{-3}$ so that dim(v) = Q/L. Famous examples with $\lambda=0$ are $v = q/|\mathbf{r}-\mathbf{r}_0|$ in 3D, and $u = -\, q\, \ln(r/r_0)$ in 2D.

Decompose g = g1 + g2. If we plot any of the sines in our g sum just stated, we can ask what happens if we "reverse the graph". We plot $\sin(n\varphi/2)$ from $\varphi = 0$ to 2π and we get a curve. If we then rotate this curve vertically about the $\varphi = \pi$ line, which is the same as reflecting the curve about $\varphi = \pi$, we either get the same sine curve, or the negative of that curve, so we refer to the curve as either even or odd. What this really means is that the term in the g series is even or odd under reflection through the x = 0 plane. We find that the n = even terms are all odd, and the n = odd terms are all even! For example, for n = 2, we have $\sin(\varphi)$ which is clearly odd if we reflect it through $\varphi = \pi$. Stak isolates the even and odd terms, then redefines the summation indices, and ends up with the two equations bottom page 282. I show in pencil at page bottom how you can generate these series by taking 1/2 the sum and difference shown. So clearly the g_1 part is odd under reflection in the x=0 plane. These pencil equations explain completely the interpretation stated at the top of page 283 of g_1 and g_2 in terms of image sources.

What is the g1 solution? We have our plus source and a negative image each of size 1/2 as shown by the pencil first equation. Clearly this makes u=0 on the entire x axis and this is compatible with our boundary condition. By uniqueness applied to our Helmholtz potential theory, the solution away from boundaries and sources must be the same as just the solution of the two sources. But the solution for each source is just our E_2 function, which can be written as a Bessel H, and we end up with 7.210 for g_1. If at this point we were to write each H using the integral representation 7.202, we could reflect the integral and express each term in g_1 as a certain integral $\int_{-\infty}^{0} d\nu$ of a little $e^{i*stuff}$ / square root. Now all we have done with all this work is to take our known function g_1 shown as a sum in 7.209 and rewrite it as an integral.

What is the g2 solution? Apparently this is a much harder problem to solve, and Stak's method is quite elaborate. Notice that in this case, we don't even get g_2 = constant on our x=0 plane. He uses tools that I think appeared in Sneddon's book. He starts by noting that g_2, due to two equal positive charges, will be symmetric about $\varphi = \pi$ and thus will have $\partial_\varphi g_2 = 0$ there, and of course we know that $g_2 = 0$ at $\varphi = 0$, so g_2 is the solution of system 7.211 which is almost identical to our starting problem 7.206 except here we have boundaries at $\varphi = 0$ and π. Now we already know that the solution g_2 of this system can be written as the series in 7.209. By introducing the auxiliary series s, Stak is able to write s as an integral 7.215 and thus g_2 is a difference of such integrals as in 7.212. This leads to 7.216 for the sum of both g_1 and g_2 . If we then use the integrals mentioned above for g_1, things combine in a nice way and we end up supposedly with g = 7.217 which is a difference of two integrals. The special distances R and R* appear in the integrands, where these distances are shown in Figure 7.10 and are expressed top of page 285. Notice that the two terms in 7.217 do not align with g_1 and g_2.

Note: I have not verified the math of this section.

Question: At this point, the innocent reader has to be asking: why on earth do we want to take our solution to this problem 7.207, which is a nice series, and write it as the integrals in 7.217? One advantage is that the integrand contains only simple elementary functions, whereas the sum contains a product of ugly Bessel functions. Another possible advantage is that the dependence on the Helmholtz parameter λ is isolated into a simple exponential factor (this turns out to be very useful later when we need to take the Laplace inverse transform of our integrals!) . If past indicates future, Stak will probably make use of 7.217 somewhere in what lies ahead.

The cosine angle conditions: Well, we shall indeed soon see the great significance of 7.217. A benefit of the form is that as $r_0 \to \infty$, each term goes to some function of r,φ, *or* it goes to 0, depending on the sign of the related cosine! Let's consider these two cosines right now, anticipating what is to come:

$\cos[(\varphi-\varphi_0)/2] < 0$ when $\pi/2 < (\varphi-\varphi_0)/2 < 3\pi/2$ or $\pi < \varphi-\varphi_0 < 3\pi$ or $\pi+\varphi_0 < \varphi < 3\pi+\varphi_0$ t1

$\cos[(\varphi+\varphi_0)/2] < 0$ when $\pi/2 < (\varphi+\varphi_0)/2 < 3\pi/2$ or $\pi < \varphi+\varphi_0 < 3\pi$ or $\pi-\varphi_0 < \varphi < 3\pi-\varphi_0$ t2

In the figure below, where we have moved the source to the left of the half-plane edge, we show with double arrow curves the angular regions in which one or the other of our two terms must vanish:

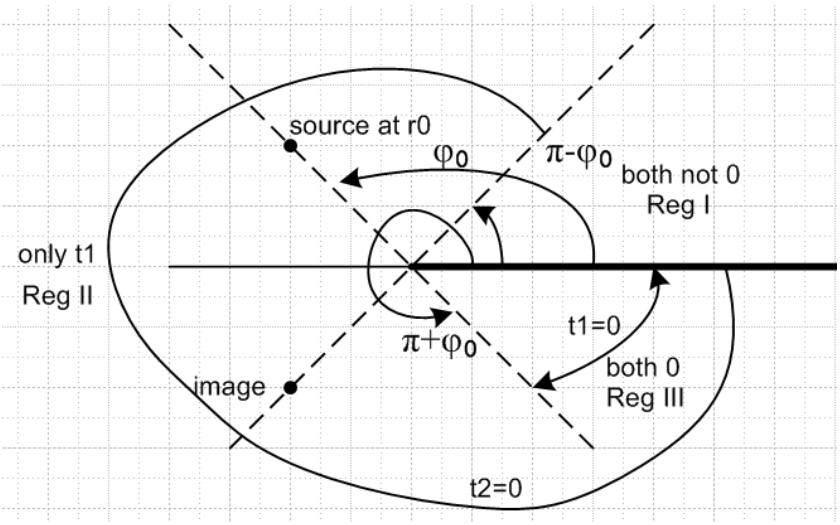

Remember that the source and image are supposed to be infinitely far out on their dotted rays shown. [See Caveat below which applies to the upcoming claims.] We see from this picture that both terms vanish in the region that is the shadow of the source (Region III), so our Helmholtz solution is u = 0 in the entire region! In Region I both terms are active, and we can interpret this as first term = incident wave, second term = reflected wave. In Region II we have only the incident wave. Of course the term "wave" does not mean anything in the usual sense since we are just solving Helmholtz so there is no "time" to make a wave (this will be added soon).

Can we actually do these two integrals in our large r_0 limit? In this limit, each integral seems to have the form of 7.202 so t1 ~ $H_0^{(1)}(\sqrt{\lambda}\, R)$ and t2 ~ $H_0^{(1)}(\sqrt{\lambda}\, R^*)$, which seems to be only g_1 which was due to the dipole contribution of r + source and a - image. Since we have r_0 and therefore both R and R* being far away (see above picture), I think we could visualize t1 as the "incoming wave" and t2 as the "outgoing reflected wave". Remember that both only exist together in Region I. If we were to draw the contours of the two H functions shown here (R and R* very far away), we would find these contours to be a set of parallel lines perp to the direction of the source or the image. These contours are then the "plane waves" of the Helmholtz problem.

Caveat for the above: The arguments given above are incorrect, but the reason is subtle. The arguments as we shall see below only apply when ω is very large. I think the reason is that we have r_0 appearing both in the integration endpoint *and* in the integrand R (or R*) factor. So it is not quite clear what happens to the integral since R goes to ∞ as the upper endpoint goes to ±∞; things are not well defined in this limit. This is reflected in the fact that the limit $r_0 \to \infty$ does not allow use of 7.202, so the precise identification above of the t1 and t2 with H functions is incorrect. Nevertheless, the idea expressed above of the three regions and how they are related to the two integration upper endpoints being +∞ or -∞ is totally correct. Below we shall redo things with more rigor.

Technical details of the g2 rewrite. First, a certain Levine is mentioned for these details, but no reference is given. The issue here is processing 7.213 for s into a new form. The first step is to "elevate" the JH product using p 283 A, which one might find in GR. This puts all the n dependence into P_n, and it involves a distance variable ρ shown in B. We are indeed then faced with the sum shown in 7.214 which looks dimly familiar to me. By using the Mehler integral rep for P in p 284 A, and using my own little double cosine completeness formula C, Stak gets the sum to be as shown in B. This is very much like those "discontinuous integrals" we saw in Sneddon, and there is no doubt a connection somehow.

Note: I had to hunt quite a while for my double cos δ formula. It was in my bowl article, and then I found the original thing here:

D:\Work\My Interests\Physics\E&M\Electrostatics\Canonical\Charged Bowl DefinitionMethod\canonical -- Section 1_4_1 The Definition Method for the Bowl.doc

There I consider certain "offset" 1D string problems one of which has this property

$$\Sigma_{n=0}^{\infty} \cos([n+1/2]x) \cos([n+1/2]x') = (\pi/2)\, \delta(x-x') \qquad \text{interval x in } (0,\pi)$$

So fine. He now takes result B and mushes it into our work so far for s and he obtains s as in p 284 D which he then rewrites as F. We then have our two terms for g_2 and we arrive at 7.217 as noted earlier.

Note: Again, I have not done all the math steps here. Still trying to see the forest for the trees.

The Meaning of the Source and Image Source. This is not totally clear to me. Go back to g = g1+g2 on page 282. What problem to g_1 and g_2 each solve?

The g_1 function solves this 2D problem: +1 source along with -1 image source, and the half plane boundary is present on which $g_1 = 0$. Since g_1 vanishes on the entire x=0 plane, we can just model it as the two "free sources" just mentioned, as if the boundary was not there at all. So this solution is the superposition of two sources in free space, plain and simple. Hence 7.210.

The g_2 function solves this 2D problem: +1 source along with +1 image, and two boundary conditions : $g_2 = 0$ for $\varphi=0,2\pi$, and $\partial_{\varphi} g_2 = 0$ at $\varphi = \pi$. Now, if we just had two free sources, together they would meet the second BC, but not the first! So the g_2 solution is NOT just that of these two sources. If it were, we could add it to the g_1 and we could end up with just a free source at r_0 and no boundary. So in the g_2 problem, that half-plane is present!

So with these two problems clearly in mind, we can interpret the original problem as the superposition of two problems, each of which involves a source and an image source.

• Now apply the above "meaning of" to our line source Helmholtz problem. We can think of there being three separate problems that we are superposing! (1) the solo +1 source at $\mathbf{r}_0$ which is R from the observer at **r**; (2) the solo -1 source at $\mathbf{r}_0^*$ which is R* from the observer at r; (3) the combination of the two +1 sources (one at $\mathbf{r}_0$ and one at $\mathbf{r}_0^*$) and the grounded half plane which altogether is the g_2 problem. We can imagine these to be (1) **incident** wave; (2) **reflected** wave (coming from the -1 at $\mathbf{r}_0^*$!) ; (3) the **diffracted** wave which is the solution to the g_2 problem. This would be applicable for a close source. These are really "just names" we assign to the three superposed problems which seem reasonable.

• Suppose now we move the line source very far away. Then certainly (1) and (2) are plane waves at the edge of the half-plane. But problem (3) is still very complicated (we are not assuming $\omega >> 0$). Notice that problem (3) does not really "simplify" as you move the source far away, the picture always looks the same in terms of angles and a piece of the half plane.

• Now in addition, suppose we make $\omega >> 0$. Then we know something about solution (3)! In Region III solution (3) must cancel both the incident and reflected waves since we have a full shadow. And in Region II (3) must cancel the reflected wave (2), since we have only the incident wave (1). In Region I

(3) contributes nothing at all, and we have there basically (1) + (2). So indeed, (3) is a rather agile function to do all these things. We don't really separate out (3) [which is g_2] in our later work.

• Now let's ponder the impulse line source problem coming later in these notes. We need a picture, and here we show our observer located in Region I.

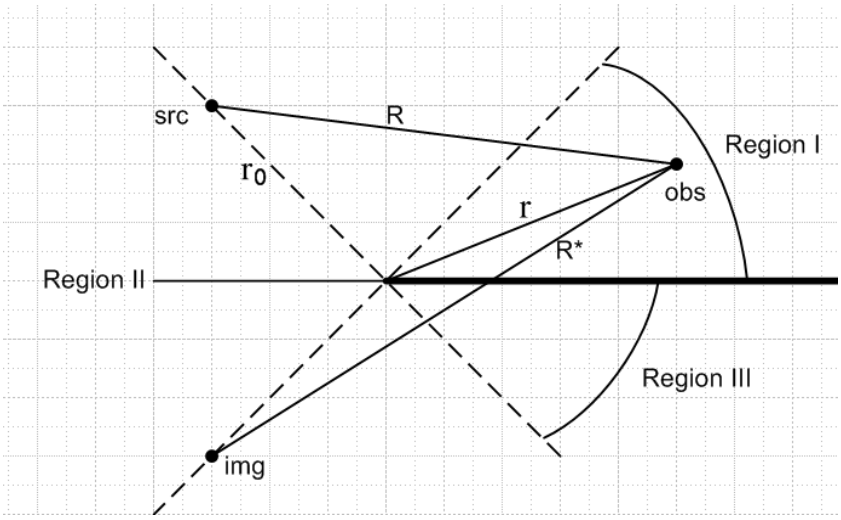

When we convert the pulsed source problem into the Helmholtz world via Laplace transform, we get a non-pulsed static Helmholtz problem with $\lambda = -s^2$. We solve this problem completely later in this section. But now suppose we think of it as a 2D problem in the wave domain. We know that a simple source puts out a sharp front shock with a wave. So if we issue the pulse at t = 0, that means both the source and the image are pulsed at that time (we are still superposing our three problems). The observer detects nothing until t = R at which time he starts seeing the source wave and then its wake. Then when t = R*, he starts getting the "reflected wave" which is R* away (remember that wave velocity = 1). Notice that this wave "goes right through the half-plane" (which is of course not there for the -1 image solo source problem which is one of our three superposed problems). Now, when the incident wave reaches the nearest point on the metal half-plane (it takes time r_0 for that to happen, and nearest point is the edge of the plane for the picture I have drawn above showing source to the left of the plane edge), the metal plane starts "radiating" and after another time r, that radiation starts reaching the observer, so we can say that "diffraction" starts happening at time $t = r_0 + r$. These are exactly the four stages outlined on page 289 for an observer in Region I, as I have drawn it. When diffraction starts, it has the effect of simply reducing everything that as happening before by a factor of 1/2 (in regions I and II -- nothing was happening yet in region III) ! Notice that before diffraction starts, the expressions shown for the incident and reflected wave are precisely the C_2 propagator shown in 5.152 on page 63, so it all ties together. Amazingly, the instant that diffraction starts, we get an instant reduction of field strength to half (in I and II).

Now if we put the observer in Region II, you might think all these same things happen just based on the length of the various distances. But an observer in Region II cannot ever get the reflected wave, because even if wavefronts are curved and source is local, nothing can "bounce" and hit him. So he first gets the incident wave, and then the diffracted wave, and that too is shown on page 289. It must be that the g_2 (3) problem cancels the (2) solo problems "radiation".

An observer in Region III is shielded from the incident wave and never gets it, nor does he get the reflected wave. So for him, nothing happens until diffraction starts.

This is all figured out clear as day on page 289 and our "interpretations" are pretty reasonable. Again, I would like to plot G in all three regions maybe using animation, maybe not.

Just to make the point again, here is an observer in Region II where there is no reflected wave:

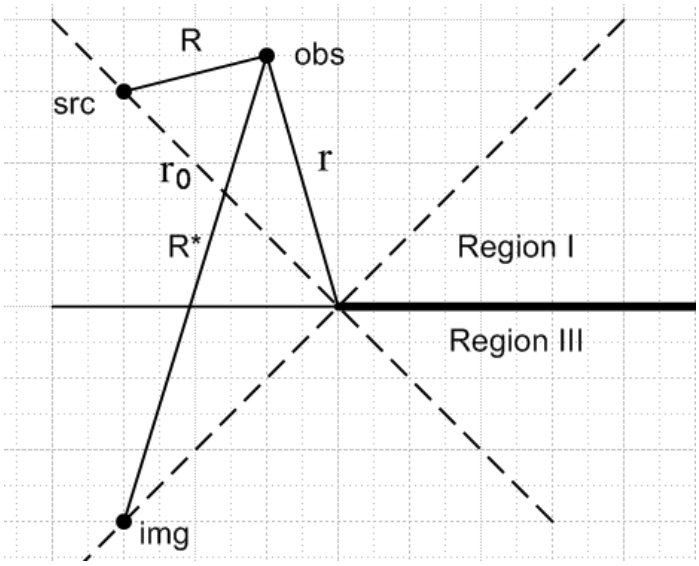

It is true that at t = R* he is "receiving" the reflected wave, but remember that this same image source is involved in the diffraction part of the solution, and so g_2 (or solution 3 as I call it) must exactly cancel out the wave coming from the image.

Plane Wave Excitation in presence of the half plane. (285)

At this point I digressed pondering what it means for a **plane sound wave** to reflect off a wall, and realized that I don't know anything about sound waves, and don't offhand know how to do reflection and refraction for any kinds of wave! It has all gone away and I now have to bring it back. My question is the boundary condition at the wall and the role it plays.

I found some PDF stuff on sound waves, see elsewhere. Sound (of not too great amplitude) obeys a wave equation where the variable is ξ, the "displacement". For a plane wave, this is the actual displacement of a band of air away from its rest position (longitudinally) due to the passage of the wave. The sound speed called c is a function of basic parameters including Kelvin temperature $c \sim T^{1/2}$. I read about all the Snell's Law stuff, but for a hard boundary you would set $\xi = 0$ because air cannot displace on a boundary plane (even for a skew hit on the wall). Note that, although pressure p also shows a wave, it is actually double the wave value right at the plane wall, due to its phase (for a direct hit). So in any event, I can interpret Stak's discussion in terms of a plane sound wave hitting a half plane, and his u(r,t) is then the sound wave $\xi(r,t)$ and my $\xi = 0$ is his u = 0 on the boundary.

[Another aside: during a normal sound wave, a piece of air oscillates back and forth so quickly that there is no time for diffusion to take place. In a high pressure region, air might start to diffuse out slightly, but very soon this same region has low pressure and air diffuses back in by that same tiny amount. It is mainly about time constants, and air diffusion has much longer time constant than T of a normal sound wave. See notes and readings elsewhere.]

If you were to consider a **plane EM wave** with E field parallel to the plane of the wall (mirror), the condition there would be E = 0 all along the mirror surface, and you can treat this E as a scalar. In either

case, you think of the reflected wave as something that cancels the incoming ξ or E at the wall. I was confused early on when I was thinking of the wave being in overpressure p which is not zero at a wall.

We might think of a wave of potential φ at low frequency, and then $\varphi = 0$ on the half plane which we can think of as being grounded. This again leads to the Stak problem. (It is the BC that I was concerned about)

Now let's review Stak's presentation here ignoring the math details. On page 285 he just states the usual expo notation for plane wave. At first it looks a little strange, we are expecting $\mathbf{k}\bullet\mathbf{r}$ but if we look at the page 281 picture, we can think 2D doing our z axis top view of the situation, and if we pick $\mathbf{r} = (r,\varphi)$ and pick $\mathbf{k} = \boldsymbol{\ell} = (\ell, \varphi_0+\pi) = (k, \varphi_0+\pi)$ as our wavevector (this means the wave is coming from angle φ_0), then of course we have $k\bullet r = krcos(\varphi_0+\pi-\varphi) = -krcos(\varphi_0-\varphi)$ and so then $e^{ik\bullet r} = e^{-ikrcos(\varphi 0-\varphi)}$, and this is what we see in 7.218. In the picture on page 287, Stak has changed the graphical size of φ_0 which confuses the reader a bit, so I have drawn the new $\boldsymbol{\ell} = \mathbf{k}$ for that case. While we are here, notice that if there were for some reason to be a "reflected wave" as shown in Fig 7.11, it has $\mathbf{k}$ at angle $\pi-\varphi_0$ so that for that reflected plane wave we would have $k\bullet r = krcos(\pi-\varphi_0-\varphi) = -krcos(\varphi_0+\varphi)$ and thus $e^{ik\bullet r} = e^{-ikrcos(\varphi 0+\varphi)}$. Both these forms will be appearing soon!

Now, going back to our 2D knife-limit wedge Green's problem (with g = 0 on the boundary), we can think of that as a 3D problem of a line source in the presence of a half-plane as noted above. We know that the solution to that problem is the fancy 7.217 with its two terms (source having value $\kappa = 1$). In 3D, our source is not a point charge, it is a line charge (having linear density κ), but we still think of it as a "Green's function" problem with a line source, and that is why we still call the solution g, as in 7.217.

Next, Stak moves the line source far away from the edge of the boundary half plane. We know that an isolated such line source makes a Helmholtz solution E_2 as shown p 285 near the bottom. We must remember that all this time, we are in a certain context: we started with the true wave equation, we did a Fourier transform and replaced time t with frequency ω, so we are in "Helmholtz space", but of course that just means $\partial_t^2 \rightarrow -\omega^2$ and we stay always in this space and later in the plane wave limit we know what the solution will look like in that it will have an $e^{i\omega t}$ time factor. Stak takes this E_2 and takes the limit as r_0 gets large (recall p 281 figure). On page 286 he shows that if we scale the E_2 function with the correct constant factor, in this far away limit we do indeed find that E_2 = plane wave $e^{-ikrcos(\varphi 0-\varphi)}$ as shown in p 286 A.

Now comes the big payoff. We know that our solution, subject to g=0 on the half plane (my ξ) is 7.217 which is rather complicated. But now we are allowed to take $r_0 \rightarrow \infty$ and 7.217 simplifies to 7.220, where again we have two terms, and where those term terms look like our incident and reflected plane waves. Notice now the upper endpoints on the two integrals. If we take $\omega\rightarrow\infty$ now to be talking about the "short wave" limit (there will then be no diffraction!), each integral in 7.220 is either a constant, or is 0, depending on the sign of the cosine factor in the upper endpoint!!! That is to say, that endpoint is either going to be $+\infty$ (we get our constant), or $-\infty$ (integral = 0). [Notice that we no longer have the issue of r_0 being in the integrand!] Stak then studies this sign and is able to identify three regions [I did this above] as shown in Fig 7.11. In each region the two cosines have certain signs, and he lists things off in 7.221. The result is astounding to me! In region II you only have the incident wave. This is reasonable because you are not in the shadow of the half plane, and the reflected wave does not exist there! In Region III we

are in shadow and get nothing. In region I we get both the incident and reflected. This is an absolute tour de force of Stakgold! He has solved the wave equation with the half plane boundary condition, and shown that the single solution called u has the right form in the three regions in the small-λ limit. Wow! So now we see why he did all that work to get 7.217.

Of course when you are not in the small-λ limit, the solution u must include all diffraction effects, the whole ball of wax is there!

Notice that this problem assumes $e^{i\omega t}$ time dependence from the very start. That is how we got the Helmholtz equation. This is a "steady state" problem where things just run forever, you can imagine what the movie would look like.

I doubt that I have ever solved the wave equation in the presence of a u=0 half plane before! This problem might be in one of the big books somewhere like Smythe or M&F. Remember that we even know the solution with a *local* line source! We don't have the solution in 3D for a point source, however. I suspect that is a much harder problem.

Derivation of 7.220 Now some details! Start with just the first integral in 7.217,

$$I = \int_{-\infty}^{2\sqrt{r\, r0}\cos[(\varphi-\varphi 0)/2]} d\nu \;\; \exp[i\omega\sqrt{R^2+\nu^2}\,]/\sqrt{R^2+\nu^2}$$

We want to get r_0 out of the endpoint so we can use the method of stationary phase concept, and to this end we define

$$\alpha = \sqrt{\omega/2r_0}\,\nu \qquad\qquad d\alpha = \sqrt{\omega/2r_0}\, d\nu \;\; \alpha^2 = (\omega/2r_0)\nu^2$$

$$\alpha_{upper} = \sqrt{\omega/2r_0}\,\nu_{upper} = \sqrt{\omega/2r_0}\;\; 2\sqrt{rr_0}\cos = \sqrt{2\omega r}\;\cos$$

Meanwhile we then have

$$R^2+\nu^2 = R^2+(2r_0/\omega)\alpha^2$$

and our integral is now

$$I = \sqrt{2r_0/\omega}\;\; \int_{-\infty}^{\sqrt{2\omega r}\cos[(\varphi-\varphi 0)/2]} d\alpha \;\; \exp[i\omega\sqrt{R^2+(2r_0/\omega)\alpha^2}\,]/\sqrt{R^2+(2r_0/\omega)\alpha^2}$$

Now factor out R from both radicals and we then have

$$I = \sqrt{2r_0/R^2\omega}\;\; \int_{-\infty}^{\sqrt{2\omega r}\cos[(\varphi-\varphi 0)/2]} d\alpha \;\; \exp[i\omega R\sqrt{1+(2r_0/\omega R^2)\alpha^2}\,]/\sqrt{1+(2r_0/\omega R^2)\alpha^2}$$

Now consider R when r_0 is large:

$$R^2 \approx r_0^2-2rr_0\cos(\varphi-\varphi_0) = r_0^2[\;1 -2\,(r/r_0)\cos(\varphi-\varphi_0)\,]$$

$$R \approx r_0\,[\;1 - (r/r_0)\cos(\varphi-\varphi_0)\,] \approx r_0 - r\cos(\varphi-\varphi_0)$$

We replace $R \approx r_0$ everywhere except in the phase where we suspect it will be important to keep the extra term, so we have

$$I = \sqrt{2/\omega r_0} \int_{-\infty}^{\sqrt{2\omega r}\cos[(\varphi-\varphi 0)/2]} d\alpha \ \exp[i\omega R\sqrt{1+(2/\omega r_0)\alpha^2}\,]/\sqrt{1+(2/\omega r_0)\alpha^2}$$

Now without justification yet, let's assume that this is some kind of stationary phase integral type situation, and the main contribution to the integral is going to come from small α. We then expand the radical in the phasor, and at the same time we will set the denominator radical to 1 since r_0 is large. We use

$$\sqrt{1+(2/\omega r_0)\alpha^2} \ \approx \ 1 + (1/\omega r_0)\,\alpha^2$$

and we now have

$$I = \sqrt{2/\omega r_0} \int_{-\infty}^{\sqrt{2\omega r}\cos[(\varphi-\varphi 0)/2]} d\alpha \ \exp[i\omega R(1 + (1/\omega r_0)\,\alpha^2)]$$

$$= \sqrt{2/\omega r_0} \int_{-\infty}^{\sqrt{2\omega r}\cos[(\varphi-\varphi 0)/2]} d\alpha \ e^{i\omega R}\ e^{i\alpha^2}$$

where again we keep the full detailed R in the first phase, but set it to r_0 in the second factor. Continuing,

$$= \sqrt{2/\omega r_0}\ e^{i\omega R} \int_{-\infty}^{\sqrt{2\omega r}\cos[(\varphi-\varphi 0)/2]} d\alpha \ e^{i\alpha^2}$$

$$= \sqrt{2/\omega r_0}\ e^{i\omega r 0}\, e^{-i\omega r\cos(\varphi-\varphi 0)} \int_{-\infty}^{\sqrt{2\omega r}\cos[(\varphi-\varphi 0)/2]} d\alpha \ e^{i\alpha^2}$$

Recapping to this point, this is the first integral of the solution 7.217 to the Helmholtz problem with a linear source of 1 unit/length source strength.

Now we are going to scale this source strength as follows. We know that if we put a *unit* strength source at distant r_0, then the Helmholtz solution (with no half plane present) is E_z which becomes p 286 A for large r_0. We want to *adjust* the source strength such that this quantity becomes just $e^{-i\omega r\cos(\varphi-\varphi 0)}$ because then we can say that our distant linear source looks like a "unit plane wave" near the half-plane edge which is where we are focusing our attention now (r is not large!) So we adjust the source strength by the factor shown in 7.219. Then our final result for the first term becomes

$$4\, e^{-i\pi/4}\sqrt{\pi\omega r_0/2}\ e^{-i\omega r 0} * (1/4\pi)\sqrt{2/\omega r_0}\ e^{i\omega r 0}\, e^{-i\omega r\cos(\varphi-\varphi 0)} \int_{-\infty}^{\sqrt{2\omega r}\cos[(\varphi-\varphi 0)/2]} d\alpha \ e^{i\alpha^2}$$

where I have added both the adjustment factor just mentioned, and the (1/4π) sitting in 7.217 in front of the integral. Thus we have

first term = $(e^{-i\pi/4}\sqrt{\pi}\,)\,\{\quad e^{-i\omega r\cos(\varphi-\varphi 0)}\quad \int_{-\infty}^{\sqrt{2\omega r}\cos[(\varphi-\varphi 0)/2]}\, d\alpha\;\; e^{i\alpha^2}\;\;\}$

and this agrees (finally) with the first term in 7.220. The second term can be traced through and you see that entire second term in 7.217 can be obtained from the first term by adding a minus sign, and changing from φ-φ_0 to φ+φ_0. So we make on the first term of 7.220 and that gives the second term.

So we have now derived 7.220 . What remains is to justify the small-α approximation we made. We had *before* assuming small α,

$$I = \sqrt{2/\omega r_0}\;\int_{-\infty}^{\sqrt{2\omega r}\cos[(\varphi-\varphi 0)/2]}\, d\alpha\;\; \exp[i\omega R\sqrt{1+(2/\omega r_0)\alpha^2}\,]/\sqrt{1+(2/\omega r_0)\alpha^2}$$

Since R is large, the phasor is turning very fast even when $\alpha^2 = 0$. When $\alpha^2 > 0$, it turns even faster. Notice that α can be very large in the integration, so $\sqrt{1+(2/\omega r_0)\alpha^2}$ can be much larger than 1. We think that "most of the contribution" will therefore come from the region of "small α" since this region is where the phasor rotation is "minimal". This means that the integration endpoints don't matter as long as they are larger than small α. It is the region around $\alpha \approx 0$ that counts. Since the cosine can be very small, the upper endpoint could be very close to $\alpha = 0$ (either above or below), so we cannot replace the upper endpoint say with $+\infty$ or $-\infty$, we have to keep it. We then do a small α fit to everything else in the integrand. We know that the phase is really what matters, so we do our small α fit in there, and that then takes us to our derivation of 7.220.

The above "form" does not quite fit our usual "stationary phase" mold because the thing that is getting large which is R or r_0 also appears in the $\psi(t)$ and f(t) functions, whereas in our Malham notes we require that the thing getting large be completely isolated. But the general concept is the same. Surely we could make the above argument rigorous and obtain a modified Malham result.

Notice that we can actually DO the indefinite α integrals in 7.220 in terms of common special functions:

```
int(cos(x^2),x);
```

$$\frac{1}{2}\sqrt{2}\,\sqrt{\pi}\,\text{FresnelC}\left(\frac{\sqrt{2}\,x}{\sqrt{\pi}}\right)$$

```
int(sin(x^2),x);
```

$$\frac{1}{2}\sqrt{2}\,\sqrt{\pi}\,\text{FresnelS}\left(\frac{\sqrt{2}\,x}{\sqrt{\pi}}\right)$$

```
int(exp(I*x^2),x);
```

$$\frac{1}{2}\,\frac{\sqrt{\pi}\,\text{erf}\left(\left(\frac{1}{2}\sqrt{2}-\frac{1}{2}I\sqrt{2}\right)x\right)}{\frac{1}{2}\sqrt{2}-\frac{1}{2}I\sqrt{2}}$$

and we see here names suggestive of optics and diffraction! You could consider smaller ω and just plot the solution $u(r,\varphi)$ near the half plane and see what it looks like. You would see distortions from the optical limit, including some bending of the wave into the shadow zone. I presume my Born and Wolf talks about stuff like this. I defer drawing such graphs until some later time to stay focused on Stak.

A Time Dependent Problem Example: Make the line source be pulsed at t=0.

Math detail p 288 top:

$\delta(t - f(\nu)) = \Sigma_i \; 1/|f'(\nu_i)| \; \delta(\nu-\nu_i)$ where $\nu_i = f^{-1}(t)$ and i enumerates multiple solutions if they exist.

Hit occurs when $\nu = f^{-1}(t)$ or $t = f(\nu)$. Now consider this integral of interest,

$$\int_{\nu_1}^{\nu_2} d\nu \; \delta(t - f(\nu)) \; g(\nu) = \int_{\nu_1}^{\nu_2} d\nu \; \Sigma_i \; 1/|f'(\nu_i)| \; \delta(\nu-\nu_i) \; g(\nu)$$

$$= \Sigma_i \; 1/|f'(\nu_i)| \; g(\nu_i) \int_{\nu_1}^{\nu_2} d\nu \; \delta(\nu-\nu_i) \qquad \text{where } \nu_i = f^{-1}(t)$$

Let's now try to apply this evaluation to the following case

$f(\nu) = [R^2+\nu^2]^{1/2}$ $\qquad f'(\nu) = [R^2+\nu^2]^{-1/2} \; \nu = \nu / f(\nu)$ $\qquad f^{-1}(\nu) = [t^2-R^2]^{1/2}$

$\nu_i = \pm [t^2-R^2]^{1/2}$ so that $f(\nu_i) = t$ are the hit points, so think of $i = \pm$. We have

$f'(\nu_i) = \nu_i / f(\nu_i) = \pm[t^2-R^2]^{1/2} / t$ $\qquad$ and $\text{sign}[f'(\nu_i)] = \pm$.

Suppose also that $g(\nu) = 1/f(\nu)$. Then our integral becomes

$$\int_{\nu_1}^{\nu_2} d\nu \; \delta(t - f(\nu)) \; g(\nu)$$

$$= \Sigma_i \; 1/|f'(\nu_i)| \; g(\nu_i) \int_{\nu_1}^{\nu_2} d\nu \; \delta(\nu-\nu_i)$$

$$= \Sigma_\pm \{ \text{sign}[f'(\nu_\pm)]/(f'(\nu_\pm)) \} \; \{ 1/f(\nu_\pm) \} \int_{\nu_1}^{\nu_2} d\nu \; \delta(\nu-\nu_\pm)$$

$$= \Sigma_\pm \{ (\pm) /(f'(\nu_\pm) \, f(\nu_\pm)) \} \int_{\nu_1}^{\nu_2} d\nu \; \delta(\nu-\nu_\pm)$$

$$= \Sigma_\pm \{ (\pm) /\nu_\pm \} \int_{\nu_1}^{\nu_2} d\nu \; \delta(\nu-\nu_\pm)$$

$$= \Sigma_\pm \{ (\pm) /(\pm) \, [t^2-R^2]^{1/2} \} \int_{\nu_1}^{\nu_2} d\nu \; \delta(\nu-\nu_\pm)$$

$$= \Sigma_\pm \{ 1 / [t^2-R^2]^{1/2} \} \int_{\nu_1}^{\nu_2} d\nu \; \delta(\nu-\nu_\pm)$$

$$= \Sigma_\pm \, [t^2-R^2]^{-1/2} \int_{\nu_1}^{\nu_2} d\nu \; \delta(\nu-\nu_\pm)$$

$$= \Sigma_\pm \, [t^2-R^2]^{-1/2} \int_{\nu_1}^{\nu_2} d\nu \; \delta(\nu \mp [t^2-R^2]^{1/2})$$

$$= \Sigma_\pm \, [t^2-R^2]^{-1/2} \int_{\nu_1}^{\nu_2} d\nu \; [\; \delta(\nu + [t^2-R^2]^{1/2}) + \delta(\nu - [t^2-R^2]^{1/2}) \;]$$

Now we know that $\nu_2 > \nu_1$ since $\nu_1 = -\infty$, so the delta hit is either +1 or 0. Thus we have verified Stak's claim that "each hit contributes the same amount $[t^2-R^2]^{-1/2}$ (when we get a hit). "

It is then just a question of seeing which delta actually gets a hit. We have $\nu_2 = 2\sqrt{rr_0}\cos[(\varphi-\varphi_0)/2]$ and $\nu_1 = 0$. So here are our two hit conditions:

$-\infty < -[t^2-R^2]^{1/2} < 2\sqrt{rr_0}\cos[(\varphi-\varphi_0)/2]$ // first term

$-\infty < +[t^2-R^2]^{1/2} < 2\sqrt{rr_0}\cos[(\varphi-\varphi_0)/2]$ // second term

and of course we know there can be no hit at all if $t < R$ since integration range is real, and also just by staring at the original integral. The $-\infty$ limit is always met since $-\infty <$ any real number, so we really have

$+\sqrt{t^2-R^2} < 2\sqrt{rr_0}\cos[(\varphi-\varphi_0)/2]$ // second term p 288 D

$-\sqrt{t^2-R^2} < 2\sqrt{rr_0}\cos[(\varphi-\varphi_0)/2]$ // first term p 288 E

Stak's F and G are just D and E applied to R*.

Now we need to think about our three regions again (taken from my picture above and equations above that):

$\cos[(\varphi-\varphi_0)/2] < 0$ when φ in Region III

$\cos[(\varphi+\varphi_0)/2] < 0$ when φ in Region III or II

Now if we are NOT in region III (meaning we are in I or II), then $\cos[(\varphi-\varphi_0)/2] > 0$ and we always get the first term hit. We only get the second term hit if $\sqrt{t^2-R^2} < 2\sqrt{rr_0}\cos[(\varphi-\varphi_0)/2]$ which says

$\cos[(\varphi-\varphi_0)/2] > \sqrt{t^2-R^2} / (2\sqrt{rr_0})$

$\cos^2[(\varphi-\varphi_0)/2] > (t^2-R^2)/4rr_0$

$4rr_0\cos^2[(\varphi-\varphi_0)/2] > (t^2-R^2)$

$t^2 < R^2 + 4rr_0\cos^2[(\varphi-\varphi_0)/2]$

$t^2 < r^2+r_0^2-2rr_0\cos(\varphi-\varphi_0) + 4rr_0\cos^2[(\varphi-\varphi_0)/2]$

$t^2 < r^2+r_0^2-2rr_0\cos(\varphi-\varphi_0) + 4rr_0(1/2)[1+\cos(\varphi-\varphi_0)]$

$t^2 < r^2+r_0^2-2rr_0\cos(\varphi-\varphi_0) + 2rr_0+ 2rr_0\cos(\varphi-\varphi_0)]$

$t^2 < r^2+r_0^2+ 2rr_0$

$t^2 < (r+r_0)^2$

$t < r+r_0$

So to summarize, if φ is in I or II, then we always get the first term hit, and we get the second term hit only if $t < r+r_0$. So I think we can say:

first integral in p 288A $= [t^2-R^2]^{-1/2} \{ 1 + H(t < r+r_0) \}$ if φ in region I or II

Now suppose we are in region III where $\cos[(\varphi-\varphi_0)/2] < 0$. Then we never get the second term hit, and we get the first term hit if

$$-\sqrt{t^2-R^2} < 2\sqrt{rr_0}\cos[(\varphi-\varphi_0)/2]$$

$$\sqrt{t^2-R^2} > 2\sqrt{rr_0}\,(-\cos[(\varphi-\varphi_0)/2])$$

$t > r+r_0$ doing same math as above.

So try to summarize this R term stuff

first integral in p 288A $= [t^2-R^2]^{-1/2} \{ 1 + H(t < r+r_0) \}$ if φ in region I or II
first integral in p 288A $= [t^2-R^2]^{-1/2} \{ 0 + H(t > r+r_0) \}$ if φ in region III

Now go back to

$\cos[(\varphi-\varphi_0)/2] < 0$ when in Region III
$\cos[(\varphi+\varphi_0)/2] < 0$ when in Region III or II

For the R* term, our results have to be modified by doing the + sign between the angles, or by doing the logical shift where Region III → Region III or Region II. I think the logic will then say

second integral in p 288A $= [t^2-R^{*2}]^{-1/2} \{ 1 + H(t < r+r_0) \}$ if φ in region I
second integral in p 288A $= [t^2-R^{*2}]^{-1/2} \{ 0 + H(t > r+r_0) \}$ if φ in region III or II

But this does not agree with 7.223's first line because he does not show the "1" term which I have.

Now I will combine these results with the - sign and add the $1/4\pi$ factors:

Region I: (Here I add in the unspoken H(t>R) type factors)

$$(1/4\pi)\,[t^2-R^2]^{-1/2}\,H(t>R)\ \{\ 1 + H(t < r+r_0)\ \} - (1/4\pi)\,[t^2-R^{*2}]^{-1/2}\ H(t>R^*)\{\ 1 + H(t < r+r_0)\ \}$$

If $t < r+r_0$ then this gives $(1/2\pi)\ \{\ H(t>R)\,[t^2-R^2]^{-1/2} - H(t>R^*)\,[t^2-R^{*2}]^{-1/2}\ \}$

And this agrees with the first line of 7.223. If $t > r+r_0$ we get just the "1" contributions, so we get exactly half the first line. This agrees with the region I claim of the 4th line of 7.233.

Region II:

general is: $[t^2-R^2]^{-1/2}\, H(t>R)\ \{\ 1 + H(\ t < r+r_0)\ \}\ -\ [t^2-R^{*2}]^{-1/2}\, H(t>R^*)\ \{\ 0 + H(\ t > r+r_0)\ \}$

So if $t > r+r_0$, then we get a 1 and a 1 so

$$(1/4\pi)\,[t^2-R^2]^{-1/2}\, H(t>R)\ -\ (1/4\pi)\,[t^2-R^{*2}]^{-1/2}\, H(t>R^*)$$

and again this agrees with the fourth line applied to region II.

If $t < r+r_0$ we instead get 2 and 0 so result is $(1/2\pi)\,[t^2-R^2]^{-1/2}\, H(t>R)$, agrees with second line.

Region III:

general is: $[t^2-R^{*2}]^{-1/2}\ \{\ 0 + H(\ t > r+r_0)\ \} - [t^2-R^{*2}]^{-1/2}\ \{\ 0 + H(\ t > r+r_0)\ \}$

If $t > r+r_0$ we get 1 and 1 which again gives the fourth line.
If $t < r+r_0$ we get 0 and 0 which gives the third line.

This concludes my derivation of 7.223 ! I am not sure why he omitted the H factors on the 4th line, they really should be there. [I below that if $t > r+r_0$, you always have $t > R$ and R^* so H not needed.]

Let's verify this last claim before submitting errata: Question: if we know that $t > (r+r_0)$, do we then know that $t > R$?? And same question for R^* ?

Well, R and R* are given page 285 A and B. So let check it out?

$t > R$?

$t^2 > r^2+r_0^2- 2rr_0\cos\psi$?

We know that $t > (r+r_0)$ and therefore we know

$t^2 > r^2+r_0^2+ 2rr_0$

$t^2 - r^2 - r_0^2 > 2rr_0$ // this is known

$t^2 - r^2 - r_0^2 >- 2rr_0\cos\psi$ // this is what we want to show

But the largest the RHS can get is $2rr_0$ and even in this worst case it is true. So that is why we don't need the H function, he is right. The same then is true for R*, it is just a different ψ. So no errata here!

What does this all say? I answer this question earlier in these notes when talking about "the meaning of the three superposed problems".

And so after a long push, we arrive at the end of this section and at the start of a set of 13 "exercises" which I sure are all bunbusters. This will be the Second Wave Midterm Exam.

Exercises: The Second Wave / Helmholtz Midterm Exam

I will do these things soon, but first want to do the next section. // Some of these exercises, starting with 7.31 on page 290, are done in separate documents in the Chapter 7 support folder.

Note added later: I did 6 of these 13 exercises, and then I *read* the 7 I did not do. The write-ups for the 6 that I did area all in separate documents. I actually did this work after finishing the chapter, then I wrote it up in the Meta Notes. I will not simply copy those Meta notes here and maybe slim them down in the meta after doing that.

Exercise 7.31 (290). 3D Helmholtz Green's Function for point charge on +z axis, sphericals

We consider here the 3D Helmholtz Green's PDE with a point source on the + z axis, so there is φ azisym. Our task is to solve the PDE for u(r,θ), so we have a 2-variable problem. We select θ for eigenfunctions which are $P_n(\cos\theta)$, and in the usual way this leads to a 1D Green's in variable r which we solve in terms of certain J and H Bessel functions, and the resulting u(r,θ) is the RHS of 7.224. But since there were no local BC's in this problem, that RHS must also be E_3 which is then the LHS of 7.224. In the usual way we rewrite this equation for $\lambda = -k^2$ and then the Bessel I and K functions appear in 7.225.

Exercise 7.32 (290). Same 3D as above, but replace the z-axis point source with a ring source.

It turns out that, when you write the δδ for this ring source, it is exactly the same as the δδ source for the previous problem except now we have $\delta(\theta-\theta_0)$ instead of $\delta(\theta)$. We are still azisym so still an r,θ problem. The exact same solution method then applies and you get the exact same result except where we used to have a 1, we now have $P_n(\cos\theta_0)$.

Exercise 7.33 (290) 3D initial condition heat problem, spherical hole in ∞ medium

Problem Statement: Consider an infinite 3D uniform heat conducting medium with a spherical hole of radius r = a at the origin. The hole contains vacuum which we assume does not conduct heat. The "boundary" here then is the sphere at r = a and the great sphere at r = ∞ and we assume that u=0 on the boundary. We take the entire medium to be at u = 0 for time t< 0. At time t=0 we turn on a spherical shell initial condition at radius $r_0 > a$ lying inside the medium. This is not a continuous heat source, it is just an initial condition, like saying the left inch of a frozen rod is at u=1 at t = 0+ε. The heat energy in this initial condition region is going to spread out (with inwards and outwards), and that is our problem. This problem has both θ and φ symmetry, so is a 1D problem in variable r. Recall how a heat source initial condition turns into a Helmholtz equation driving source, and that happens here.

To solve this problem, we first do a time Laplace to replace t by s, and we then get a 1D Helmholtz Green's problem in r for U(r,s): $-(r^2U')' - \lambda r^2 U = \delta(r-r_0)/4\pi$ where $\lambda = -s$. We realize that this is just the special case n=0 of a Green's equation we encountered in Ex 7.31 (whose function was called $a_n(r)$) so at

this point we know the general atomic form of the solution must be $Z_{1/2}(\sqrt{\lambda}\, r)/\sqrt{r}$. Also, we have certain BC's on U(r,s) at r=a and r=∞ (0 in both places). We then solve the Green's problem in r to get

$$U(r,s) = (i/8\sqrt{rr_0}\,)\,[\,H_{1/2}^{(1)}(\sqrt{\lambda}\, a)J_{1/2}(\sqrt{\lambda}\, r_<) - J_{1/2}(\sqrt{\lambda}\, a)\, H_{1/2}^{(1)}(\sqrt{\lambda}\, r_<)]\,[H_{1/2}^{(1)}(\sqrt{\lambda}\, r_>)/\, H_{1/2}^{(1)}(\sqrt{\lambda}\, a)]$$

But then since λ = -s this gets rewritten tat

$$U(r,s) = (1/4\pi\sqrt{rr_0}\,)[\;K_{1/2}^{(1)}(\sqrt{s}\, a)I_{1/2}(\sqrt{s}\, r_<) - I_{1/2}(\sqrt{s}\, a)\, K_{1/2}^{(1)}(\sqrt{s}\, r_<)][K_{1/2}^{(1)}(\,\sqrt{s}\, r_>)/\, K_{1/2}^{(1)}(\,\sqrt{s}\, a)]$$

But these simple K functions are in fact just elementary functions, allowing the above to be written as

$$U(r,s) = -(1/[8\pi r\, r_0)])\{\quad \exp[\sqrt{s}\,(2a-r-r_0)\,] - \exp[-\sqrt{s}\,|r-r_0|]\quad\}\;/\,\sqrt{s}$$

I verify at this point that this meets both BC's. Each term above has a trivial Schaum inverse Laplace, and we then get this very simple result

$$u(r,t) = (1/8\pi rr_0)\{\,\exp(-|r-r_0|^2/4t)/\sqrt{\pi t}\;\; - \exp(-\,(2a-r-r_0)^2/4t)/\sqrt{\pi t}\;\;\}$$

I then take limit t→0 to verify that we get the initial condition shell δ. I plot the solution in Maple.

Exercise 7.34 (p 290) 2D Helmholtz Green's Function outside a circle on which g=0.

The problem is to find the 2D Helmholtz exterior Green's function outside a circle on which g=0, and we solve the problem by two different methods.

The first method is my "Green's Function by Dirichlet" method where we then get a homo PDE with a certain BC for v where g = E_2 + v. We solve the homo by first selecting $e^{in\theta}$ and having unknown $v_n(r)$. The Green's ODE then for $v_n(r)$ is something we already figured out near page 269B with homo solution $Z_n(\sqrt{\lambda}\, r)$, but in this simple exterior case we must have $Z_n(\sqrt{\lambda}\, r) = H^{(1)}{}_n(\sqrt{\lambda}\, r)$ so now $v_n(r) = V_n\, H^{(1)}{}_n(\sqrt{\lambda}\, r)$ and we have only to find the constants V_n. The trick is that we can look at r=a where we know $v_n(a) = -E_2$ and this (with an addition theorem for E_2) then tells us the V_n and we get our solution which is

$$g(r,\theta|r_0,\theta_0) = (i/4)\;\Sigma_n\, e^{in(\theta-\theta 0)} * \qquad r_< = \min(r,r_0)$$
$$\{\;\; J_n(\sqrt{\lambda}\, r_<)H^{(1)}{}_n(\sqrt{\lambda}\, a) - J_n(\sqrt{\lambda}\, a)\, H^{(1)}{}_n(\sqrt{\lambda}\, r_<)\;\}\,[H^{(1)}{}_n(\sqrt{\lambda}\, r_>)\,/\,H^{(1)}{}_n(\sqrt{\lambda}\, a)]$$

The second method is more conventional. We start with the δδ Green's, select the same $e^{in\theta}$ eigenfunctions, and get then our usual 1D ODE Green's in r which we then just solve in the usual manner and the same result is obtained as shown above.

Then just for fun I took the "electrostatics limit" λ→0 of the above result and got agreement with 6.100 which was the solution we got eons ago back in potential theory for this same problem.

Exercise 7.35 (p 291) Repeat previous problem using r eigenfunctions instead of θ ones.

My doc on this problem runs 34 pages because I made a certain K error and did various other things. Since it is so long, it has its own summary section.

The problem is to repeat the previous problem, but instead of selecting $e^{in\theta}$ as our eigenfunctions, I at first selected $K_{i\gamma}(kr)$ of the KL transform, and this led to a certain 1D Green's ODE in variable θ which I then solved for $u_i(\theta)$. But then I realized that I was solving the wrong problem, one with a = 0, not a = a. The KL transform for interval (a,∞) is *different* and has a discrete spectrum, not the continuous γ spectrum. So I had to go back to r-space and figure out the new KL series transform. It turns out that the functions are then $K_{\mu i}(kr)$ where μ_i are points where $K_{\mu i}(ka)$ has a zero. This is similar to the Fourier-Bessel transform situation. It is also similar to Smythe's electrostatics cone solution. Here we need μ_i to be a zero to meet the BC that u = 0 on the circle! The θ 1D Green's ODE is the same as I found at the start and I solved it again toward the end. The final solution comes out being

$$u(r,\theta) = -\Sigma_i \; K_{\mu i}(kr)\, K_{\mu i}(kr_0)\, I_{\mu i}(ka)\, \text{Res}[1/K_\mu(ka)]|^{\mu=\mu i} \; [\sin(\mu_i \pi)]^{-1} \cos[\mu_i(\pi - |\theta|)]$$

The only catch is that the zeros of this K function are not tabulated as they are for $J_{\mu i}(ka)$. I looked a bit on the web and found some work on that subject.

Exercise 7.36 (p 291) 2D Helmholtz Neumann Green's Function in slab with ring source.
(partial solution only in separate doc)

Ring Helmholtz (λ_H) source at $z=z_0$, radius r_0, inside infinite slab z = (0,h). I write the usual PDE with its δδ source. I manually separate with sep constant $\lambda=\kappa^2$ and I see that the atoms are $\exp(\pm\sqrt{\lambda-\lambda_H}\, z)$ and $J_0(\kappa\rho)$. This is cylindrical coords with φ azisym. The BC's are Neumann ones, $\partial_n u=0$ on z=0,h so no heat goes through the slab faces so to speak. I only review the solution methods below, I don't carry the solutions through to completion.

I first do Method A using the $J_0(k\rho)$ (spectrum real k) eigenfunctions and as usual this gives me a 1D Green's problem in z which I solve in this generic form where $\kappa^2 = -\; [k^2 - \lambda_H]$

$$U(k,z) = [J_0(kr_0)/2\pi] \cos(\kappa z_<) \; [\, A\sin(\kappa z_>) + B\cos(\kappa z_>) \,] \qquad z_> = \max(z,z_0) \;\text{ etc}$$

but then I don't complete the solution and leave A and B as constants unknown. The two conditions will be the jump condition and the BC at z = h.

Next I do Method B using $\cos(k_n z)$ (spectrum $k_n = n\pi/h$, integer n) eigenfunctions to meet the two BC's. I change from z to θ to make use of the Fourier cosine series transform. After fiddling, I come up with the expected 1D Green's problem in variable ρ which has solution of form C $(1/\pi h) \cos(n\theta_0) J_0(\kappa\rho_<) H^{(1)}{}_0(\kappa\rho_>)$, but I don't evaluate C.

I could finish off this problem in a few hours, but I feel I have done enough of this type of problem already. The method is very clear to me, and NOW it is very clear to my why that method always works. Originally I was very confused on this "why" question, but that question is now answered in detail in a separate doc "separation and transforms 2D chap 7".

NOTE: It was at this point near the start of August 2011 that I stopped my forward motion in Stak Chap 7, and I went off and first wrote my Stackel separation doc and then my tensor doc. Amazingly these

took 3 months to do, and only today Dec 10, 2011 am I resuming Stak Chap 7. Much time has passed and I don't really feel like doing any "extra" mid term problems! But I will at least read them!

Exercise 7.37 (p 291, read only) Find temp inside a slab with Dirichlet initial conditions.

This is a full heat problem using the same slab as in the previous problem (but no ring source anymore I assume). Our boundary condition is u=0 at z=0 and u = f(ρ) at z=h. I assume that the initial condition is that u = 0 everywhere inside the slab, but the solution is probably independent of what initial condition you select. With the u=0 initial condition, heat will flow in from the upper slab surface and we will end up at t=∞ with some temperature u(ρ,z) inside the slab, and that is what we are supposed to compute.

Exercise 7.38 (p 291) Waveguide 3D Helmholtz Green's Function Problem.

This is a genuine 3D Helmholtz problem with all three variables active. Our 3D region is obtained by extruding some finite 2D region R in the z direction. If that region R were a disk, the 3D region would be a cylinder, but Stak I think calls it a cylinder regardless. He is thinking of this as a **waveguide** in a true wave problem where u = 0 on the guide surface which I suppose might apply to a certain wave mode like TE or whatever. But he is not worried about the actual wave problem, just a related Helmholtz problem where u = 0 on the cylinder wall.

We are asked so find a separated solution of the form Z(z) φ(x,y).

The first approach is to look at the transverse PDE that we get from separation which is just a 2D Cartesian Laplace equation and we imagine finding the eigenvalues and the 2D eigenfunctions of this transverse problem. We then use these transverse 2-variable eigenfunctions in an attempt to solve the 3D Helmholtz Green's problem with a point source inside the waveguide. You find that you are left with a 1D Green's function in the variable z which you would solve as something of the form $e^{-a|z|}$ with the jump at z=0. You then insert your resulting 1D z-Green into your expansion on those 2D transverse eigenfunctions, and the result should have the form 7.227. From this form we find that if $\lambda < \nu_1$ (the lowest eigenvalue), waves damp out and cannot propagate (I recall this as being a waveguide cutoff thing).

The second approach is to instead use $e^{-i\alpha z}$ eigenfunctions and we know this will then produce a 2D Green's function problem in x and y which he writes out, the unknown being $\hat{g}(x,y)$. As I think about it, I don't think Stak ever wrote down the generic bilinear φφ* form for a Helmholtz Green's function. For heat we know it is $g(x,t\,;\,x_0,\,t_0) = \Sigma_k[e^{-\lambda_k(t-t0)}]\,\varphi_k(x)\varphi_k^*(x_0)$ so if we were to Laplace this thing, the expo becomes a pole in the s plane which is perhaps α^2 in this problem, and that then would explain the final result he gives on page 292. [see solution for this bilinear formula.]

Exercise 7.39 (p 292) Induced Helmholtz current on half-line with point source off left end (2D).

We are back to our half-plane Helmholtz problem with a line source off the edge of the half plane ($\varphi_0 = \pi$). We are first asked to simplify the general formula 7.217 for this special position of the line source. From this g we could certainly compute the jump he shows at the bottom of page 292. In electrostatics, this would be the charge density (sum on both sides) for a surface, and we would expect a quadratic blow up at the edge. In some way I don't understand right now, in the corresponding wave problem (which becomes the Helmholtz problem), this charge density becomes a time dependent current density on the metal surface. It certainly seems reasonable. See solution doc.

Exercise 7.40 (p 293, read only) Induced current on half-line due to incident plane wave (2D)

More plane-wave Helmholtz. We start with the $r_0 = \infty$ but λ = finite scattering formula 7.220 which recall is exact. We still regard this as a Green's function for our very far away 2D rescaled point (3D line) source which is at some angle φ_0. And the formula bottom page 292 still gives the total "current" density on the half plane, so if we apply that formula to this 7.220 Green's we are supposed to get 7.229. Notice that r_0 does not appear in this result because we are in the r_0 rescaled plane wave limit. In contrast, the previous problem was a finite-r_0 problem. You cannot directly take the $r_o \to \infty$ limit of its result, something we have seen elsewhere, so we cannot compare 7.228 to the $\varphi_0 = \pi$ limit of 7.229. The last part of 7.40 is to set $\varphi_0 = \pi/2$ for the source hitting flat onto the half-plane, and I quickly did that to verify 7.230

Exercise 7.41 (p 293, read only) Redo the half-line problem for Neumann instead of Dirichlet.

In our entire half-plane analysis, we always used u=0 on the half-plane, as if it were grounded. Here we are asked to repeat the entire analysis for $\partial_n u=0$ on that half plane. So we did Dirichlet, and we are asked now to do Neumann (and of course this is still Helmholtz). So we have to go way back and redo the 2D problem perhaps for finite angles with this BC, then set angle 2π, etc etc.

Exercise 7.42 (p 293, read only) Sound wave interface between two media.

This is a sound wave problem. We have a plane interface between two different media. He means to say medium 1 is on the z> 0 side and this is where the point source is put. If we replace time t with frequency ω using FT for monochromatic, I guess we get the two wave equations he shows first, where q are some arbitrary sources. Instead of both media having velocity 1, they are different so there are two k's floating around now. The big mystery for me is why he suddenly switches from "the velocity potential u" to something he calls "the complex potential U". I presume $u = U e^{i\omega t}$ as on page 285, OK. Now our problem involves not one but two equations and two regions. If we go to cylindrical coordinates, the problem is φ azisym, so our only two variables would then be ρ and z. I would rewrite that first equation and get it into our usual $\delta\delta$ form, then I would maybe use eigenfunctions in ρ (the $J_0(k\rho)$) and come up then with a 1D Green's for the other coordinate z which has a $\delta(z-z_0)$ hit. This is why he mentions Hankel transform. So somehow you have to deal with the two regions and the BC's at the interface. A typical bunbuster Stak problem.

Exercise 7.43 (p 294, read only) Solve the 3D Helmholtz sphere with q(x) distributed source.

This is a 3D Helmholtz for a sphere with u=0 on the boundary and driven by some arbitrary distributed source q(x) inside. I guess we are first supposed to know the internal Helmholtz Green's function. Did we do this somewhere, or do we have to figure it out here? I guess we did this for the source point on the z axis in Ex 7.31, so we could maybe modify that result to get a more general Green's. Then we integrate that thing against q(x) to get the solution to this problem as an integral. Then evaluate that Green's function at sphere center, and you are supposed to get the expression shown! OK, some very rainy day maybe I will come back and try this "read only" problem.

Section 7.14 Exterior Helmholtz Solutions (294)

Up to now we have really only done the half-plane problem where the "scatterer" is not localized. Now we want to consider an arbitrarily shaped 3D "scattering object" which is localized, which means you can enclose it in a sphere of some radius r_0. I am very happy to see Stak confirm my claim made long ago that the implication is that outside that sphere, you can represent the k-space wave equation solution u (ie, the Helmholtz solution) as an expansion on spherical harmonics. [Note: if you separate Helmholtz instead of Laplace in sphericals, the only difference is that the radial functions are $J_{\pm(n+1/2)}(kr)/\sqrt{r}$ instead of r^n and r^{-n-1}, say Moon and Spencer, confirmed below.] Projecting the Helmholtz equation with these harmonics (atoms), you get 7.233 as the radial equation where $u_{mn}(r)$ are the coefficient functions, which he redefines into v_{mn} solving p 295 A. But this is one of our Bessel forms and the solution vanishing at ∞ is going to be $H^{(1)}_{n+1/2}(\sqrt{\lambda}\, r)$ and so we obtain our solution 7.235 for $r>r_0$. This is all very well done and completely clear. If we now take the famous large r limit of this expansion and keep only the leading term in r, we find that u has the form $u(r,\theta,\varphi) = f(\theta,\varphi)e^{ikr}/r$ where $k = \sqrt{\lambda}$ in my private notation. As long as λ has a positive imaginary part, we are getting expo decay here! Stak points out that in Laplace with $\lambda = 0$ we only got *power* decay as shown in p 295 D. Without further ado, I recognize the above form as the outgoing wave (I guess $H^{(2)}$ might have yielded the seldom-used incoming wave). And of course $f(\theta,\varphi)$ is the famous "scattering amplitude". This is then the "partial wave expansion" of the solution of the wave equation in this context, though perhaps that phrase is used more often when there is no φ dependence and you have only $f(\theta)$.

Side note: If we were doing QM and the SE rather than the wave equation, we might interpret u as a quantum amplitude and then $|u|^2 d\Omega$ would be the probability of scattering into $d\Omega$, and then if we started with a single particle in some sense, unitarity would say $\int |u|^2 dV = 1$ which says $\int d\Omega\, |f(\theta,\varphi)|^2 = 1$ and we see that the 1/r in u squared cancels the $r^2 dr\, d\Omega$ in the volume element. [no absorption]

What is the 2D analog of the above discussion. Outside circle of radius r_0 we can expand our solution on the atoms $e^{in\varphi}$ and it turns out that the radial equation solutions are then $H^{(1)}_n(\sqrt{\lambda}\, r)$ and then the large r form is $u(r,\varphi) = f(\varphi)e^{ikr}/\sqrt{r}$. Remember that in 2D you always get the "straight" Bessel functions, while in 3D you get the "spherical" ones which have n+1/2 half integral orders. So in 2D the partial waves are much simpler, and we have that $\sqrt{r}$ replacing r in the denominator which I know is just a fact of "unitarity". Again, it we were in QM, we could find $\int d\varphi\, |f(\varphi)|^2 = 1$ and the $1/\sqrt{r}$ in u (squared) cancels the $r\, dr\, d\varphi$ in the volume element. These are just passing comments and I intend no rigor.

Radiating Exterior Dirichlet Problem.

Now we look more closely at our "scattering" problem. We assume that our arbitrarily shaped localized object has $u = f(x)$ on its boundary σ. We imagine some very distant perhaps spherical boundary σ_r. We assume an "outgoing" solution at $r=\infty$. So this is the exterior Helmholtz Dirichlet problem in the scattering context! On page 297 Stak proves in the usual manner that if a solution exists, it must be unique. He defers the existence proof (also as usual; recall that you usually have to construct a solution as part of such a proof). He then has 2.5 pages of "remarks", which are my "comments". I will summarize those remarks here. They basically all relate to the uniqueness proof.

(1) He assumed λ = complex in his uniqueness proof, but it goes through as well with $\lambda = -k^2$ real.

(2) If $\lambda = \omega^2$ conclusion is the same using "limiting absorption". But as an alternative, Stak claims that you can get uniqueness by requiring a certain strange condition on u shown in 7.242. He shows that this condition causes there to be a positive outgoing energy flow through a distant spherical boundary he calls σ_r. He claims that if this condition is met, you can show uniqueness with $\lambda = \omega^2$ without appealing to limiting absorption. This seems quite an obscure little sidelight, the Rellich-Sommerfeld Radiation Condition it is called.

(3) In 2D the uniqueness proof is as in 3D.

(4) It is possible that the scatterer might have such a sharp corner that it causes a singularity in the solution u or its gradient, see page 299 picture. Such a singularity impedes the usual application of Green's Theorem used in the uniqueness proof. The trick is to replace the actual boundary σ by σ' which does not have the sharp corner. Then things will be OK as long as a small spherical integral σ'' (p 299A) around the corner problem vanishes. If it does, then the uniqueness proof goes through OK. There are more details here which you can go read p 299. He makes the strange comment that the singularity at a corner or vertex must be weak enough that "there is no source concentrated there". In electrostatics you always have some σ surface charge, especially at a vertex, so I don't know what he means. Defer. I think Stak means there are no non-induced sources at/on the scattering object.

(5) Uniqueness goes through if you assume Neumann or Radiative BC instead of Dirichlet.

(6) For the usual infinite wedge problem which has a sharp vertex, the uniqueness proof is harder.

Section 7.15 The Scattering Problem (299)

Now we add our "incident field", we assume Helmholtz valid in "whole space", and we require no non-induced sources at/on the scattering object. Object interior is R*, exterior is region R. We assume Dirichlet u=0 on the boundary. Writes solution $u = u_i + u_s$ where u_i is the incident wave, and u_s the (required outgoing) scattered wave that "we regard as being generated by sources induced on the surface". The problem for u_s is stated in 7.245 where of course $u_s = -u_i$ on the surface.

Here are equation derivation details I added later after my first reading:

Derive p 300A. This is a set of standard moves I have done many times before. First, 7.245 must be derived. The total solution function is u for our incident + scattered wave. We assume that u_i is what the source would generate with no scatterer -- that it is not influenced by the scatterer. Therefore u_i solves the H equation all on its own (away from the sources which generate u_i). When we add the scatterer, the solution is no longer $u = u_i$ but is u_i+u_s. We know that u_i solves the HE and so does U, therefore so does u_s. Since u=0 on the surface of the scatterer, we get 7.245, QED. Of course 7.246 is the definition of the fundy E function.

So now we do the usual (as Stak says).

$\nabla^2 u_s + \lambda u_s = 0$	x in R, the exterior region	$u_s = u_s(x)$
$\nabla^2 E + \lambda E = -\delta(x-\xi)$	for any x and ξ	$E = E(x\|\xi)$

We then construct

$$E(\nabla^2 u_s + \lambda u_s) = 0$$

$$-u_s(\nabla^2 E + \lambda E) = u_s \delta(x-\xi)$$

add

$$E(\nabla^2 u_s + \lambda u_s) - u_s(\nabla^2 E + \lambda E) = u_s \delta(x-\xi)$$

and then integrated over the exterior region R, and think of ξ as an exterior point

$$\int_R dx \{ E(\nabla^2 u_s + \lambda u_s) - u_s(\nabla^2 E + \lambda E) \} = \int_R dx\, u_s \delta(x-\xi) = u_s(\xi)$$

$$\int_R dx \{ E(\nabla^2 u_s) - u_s(\nabla^2 E) \} = u_s(\xi)$$

and the two λ terms cancel on the LHS. So we now have the first part of p 300A. Next we go to our integral theorems page and pull out this one,

$$\int_V dV [\psi \nabla^2 \varphi - \varphi \nabla^2 \psi] = \int_S dS [\psi(\partial\varphi/\partial n) - \varphi(\partial\psi/\partial n)] \qquad (6) \qquad \text{Green \#2}$$

and we set $\psi = E$ and $\varphi = u_s$ so get

$$u_s(\xi) = \int_S dS [E(\partial u_s /\partial n) - u_s(\partial E /\partial n)]$$

We think of this S as the surface boundary and the great sphere. For local sources we can easily argue that the GC piece goes away. He claims that both E and u_s decay exponentially. Why is that? It is true for E in n=2 or 3 if λ has a positive imaginary part or if $\lambda = -k^2$, as shown back on page 266. Since the scattered field u_s is generated by some "induced sources" each of which makes an E-like field, I guess we get the same conclusion for u_s. Therefore, the surface S integral above is only over the scatterer's surface σ.

Now what about sign? For the scatterer surface σ as a boundary of region R, the normal points out from the region, and in this case, it then points into the scatterer object. If we want n to be "out", perhaps a radial vector for a sphere, we need an overall minus sign. Thus we get

$$u_s(\xi) = \int_\sigma dS [u_s(\partial E /\partial n) - E(\partial u_s /\partial n)]$$

and I now agree with all of p 300A, and with the fact that the first term is 0.

The next step is to write $u_s = u - u_i$ in the integral terms. Then

$$u_s(\xi) = \int_\sigma dS\ [(u-u_i)(\partial E/\partial n) - E\{(\partial u/\partial n) - (\partial u_i/\partial n)\}\ ]$$

$$= \int_\sigma dS\ [(-u_i)(\partial E/\partial n) - E\{(\partial u/\partial n) - (\partial u_i/\partial n)\}\ ] \qquad \text{// since } u = 0 \text{ on } \sigma$$

$$= \int_\sigma dS\{\ E(\partial u_i/\partial n)\ - u_i(\partial E/\partial n)\ - E\{(\partial u/\partial n)\ \}$$

and this then agrees with 7.247.

Derive p 301 A. Now we are at the top of page 301. I have already said 7.248 is true in all space except at the sources of u_i so it is certainly true inside the scattering object. Now we are directed to do another combination of equations with integration. We start then with 7.248

$\nabla^2 u_i + \lambda u_i = 0$	x inside R*	7.248
$\nabla^2 E + \lambda E = -\delta(x-\xi)$	for any x and ξ	7.246

Then process as he says

$E(\nabla^2 u_i + \lambda u_i) = 0$	x inside R*	7.248
$-u_i(\nabla^2 E + \lambda E) = u_i\delta(x-\xi)$	for any x and ξ	7.246

then add and integrate over the inside, for arbitrary ξ at this point:

$$\int_{R^*} dx\ \{\ E(\nabla^2 u_i + \lambda u_i)\ - u_i(\nabla^2 E + \lambda E)\ \}\ =\ \int_{R^*} dx\ u_i\delta(x-\xi)$$

$$\int_{R^*} dx\ \{\ E(\nabla^2 u_i) - u_i(\nabla^2 E)\ \}\ =\ \int_{R^*} dx\ u_i\delta(x-\xi)$$

Now apply Green #2 to the LHS

$$\int_v dV\ [\ \psi\ \nabla^2\varphi - \varphi\ \nabla^2\psi\ ] = \int_s dS\ [\ \psi(\partial\varphi/\partial n) - \varphi(\partial\psi/\partial n)\ ] \qquad (6) \qquad \text{Green \#2}$$

setting $\psi = E$ and $\varphi = u_i$ to get

$$\int_{R^*} dx\ \{\ E(\nabla^2 u_i) - u_i(\nabla^2 E)\ \} = \int_s dS\ [E\ (\partial u_i/\partial n) - u_i\ (\partial E/\partial n)\ ]$$

where now n is the out pointing normal and S = σ, so we then have

$$\int_\sigma dS\,[E\,(\partial u_i/\partial n) - u_i(\partial E/\partial n)\,] = \int_{R^*} dx\, u_i\delta(x-\xi) = u_i(\xi) \int_{R^*} dx\, \delta(x-\xi)$$

This is in exact agreement with p 301 A.

Derive p 301 B. We have just shown in p 301A the fact that if ξ in R, then the first term in 7.247 in fact vanishes, something we did not know until now. Thus 7.247 really says

$$u_s(\xi) = -\int_\sigma dS\, E\{(\partial u/\partial n) \qquad \xi \text{ is external}$$

We finally define I = + ∂u /∂n where n is the out-pointing normal from the scatterer and then we have

$$u_s(\xi) = \int_\sigma dS\, E\,(-I) \qquad \text{// which is p 301 B and C}$$

Now finally we can conclude that -I is the "induced source" on the surface σ and it is what is creating u_s. I don't know why he did not include a minus sign in the definition of I, that is a mystery. It is true that with this choice of sign, the integral equation for I shown in 7.250 has no minus sign, so perhaps that is the motivation.

Derive p 301 E. Well, imagine deforming some ellipsoidal scatterer into a thin shell. On the convex surface we have $I_+ = \partial u/\partial n$ just as for the original ellipsoid. We think of $n = n_+$ as the outpointing normal there. On the inner surface of this thin shell we have $I_- = \partial u/\partial n$ where again n is the outpointing normal on that inner surface which we call n_- for this surface. So we get the two terms in p301 E where both have plus signs. Of course $n_+ + n_- = 0$ as he points out.

Using the symmetry of the Green's, we get 7.249. This is the Helmholtz version of our old friend from potential theory. The function -I here is the "induced source density" on the surface, and each point of that source produces some E, and we add it all up to get the induced source radiation field u_s. He comments that in an EM wave situation, I is the induced current (in electrostatics it was the induced charge density, so finally we see why Stak used the symbol I so long ago). As in potential theory, we regard this as a simple layer situation, we take x→ s, a point on the surface σ, there is no "extra term" and we end up with 7.250. Since $u_s = -u_i$ at the point x = s, we now have just an integral equation for I where everything else is known (E and u_i) so we now have "the integral equation method" for solving this Helmholtz problem. He notes that this is a Fred 1 integral equation and that you can convert it into a more friendly Fred 2.

So note well: Stak has now stated the scattering problem with an arbitrary "initial wave" in terms of an integral equation for the induced surface source I.

Plane Wave Excitation

[some details follow this paragraph] We now set $u_i = e^{i\omega x\bullet\alpha}$ (unit amplitude), state E in this case ($\lambda = \omega^2$) again as e^{ikR}/R with the usual 4π factor. Note that this approaches potential theory in the limit ω → 0, the DC limit, seems reasonable. Stak now takes his expression for u_s as an integral over E and I, and takes the large R limit for x going distant. Since x is all in the E factor, we take its limit, and find result

7.252 where we now see $e^{ikR}/4\pi R$ form on the outside, and the residual integral he calls $A(\beta,\alpha)$ where β is direction to observer, and α is direction in which the incident wave is traveling. We just saw this happening in 7.236 where we referred to the coefficient as $f(\theta,\varphi)$, so $A(\beta,\alpha) = f(\theta,\varphi)$ for the plane wave incident problem where we have to align our θ,φ angles in some manner, perhaps relative to the incoming plane wave. In any event, I would again refer to A as "the scattering amplitude" (far field). He then on page 303 proves the **Reciprocity Principle** which says $A(\beta,\alpha) = A(-\alpha,-\beta)$. This means now that the incident is coming from where the observer was, and the observer is now where the incident was coming from. Stak regards this result as "remarkable" (a frequent physics paper word) in that it is independent of the shape of the scattering object. The proof involves nothing but the definition of A, the integral expression for u_s, and the symmetry of the free-space propagator (the key thing I suspect).

Derive p 302 C. Well

$$|x-\xi|^2 = x^2+\xi^2-2x.\xi = x^2+\xi^2- 2x\xi\cos\psi = |x|^2+|\xi|^2- 2|x||\xi|\cos\psi$$ meaning of prev

$$= |x|^2[1+|\xi|^2/|x|^2- 2|\xi|/|x|\cos\psi\ ]$$ // page 302C

And then

$$|x-\xi| = |x|[1+|\xi|^2/|x|^2- 2|\xi|/|x|\cos\psi\ ]^{1/2} \approx |x|\ [1- 2|\xi|/|x|\cos\psi\ ]^{1/2} \approx |x|\ (\ 1 - |\xi|/|x|\cos\psi\ )$$

$$= |x| - |\xi|\cos\psi$$

Therefore

$$\exp(i\omega\ |x-\xi|) \approx \exp(i\omega|x|)\ \exp(-i\omega|\xi|\cos\psi)$$ // page 302 D

Now if $\hat{\boldsymbol{\beta}}$ is a unit vector aligned with **x**, the distant observation point, then

$$\cos\psi = \hat{\boldsymbol{\xi}}\bullet\hat{\mathbf{x}} = \hat{\boldsymbol{\xi}}\bullet\hat{\boldsymbol{\beta}}$$ and $$|\xi|\cos\psi = \boldsymbol{\xi}\bullet\hat{\boldsymbol{\beta}}$$

and then

$$E = \exp(i\omega\ |x-\xi|)/\ 4\pi|x-\xi| \approx \exp(i\omega|x|)\ \exp(-i\omega|\xi|\cos\psi)\ /\ 4\pi|x|$$

$$\approx \exp(i\omega|x|)/\ 4\pi|x|\ *\ \exp(-i\omega\ \boldsymbol{\xi}\bullet\hat{\boldsymbol{\beta}}\ )$$ // page 302E

and this then trivially gives 7.252.

In all this stuff, Stak has been writing I as I_α implying this is the induced current due to an incoming plane wave in the $\hat{\boldsymbol{\alpha}}$ direction, and this leads directly then to 7.253.

Scattering Cross Section

Stak now uses a general power flux formula developed earlier to compute P_i and P_s, the incident and scattered energy flux. **Cross section** (total) is then $D = P_s/P_i$. Playing with the power formula, he obtains p 304 A which says that D is the energy of u_s crossing out through the entire far boundary. He then comes up at page bottom with the familiar **Optical Theorem** relating cross section to imaginary part of forward amplitude. I have not yet done the details, but there is a big point here: all these results come just from Helmholtz PDE analysis. Any physics for which the Helmholtz applies (for example, sound with amplitude not too large) will show these results. In particular, you get the Helmholtz equation in non-rel QM from the SE (where $\lambda = \pm E$ I suppose), so these conclusions apply to non-relativistic QM scattering. [Note that it is the SE there, not the wave equation, but that both result in Helmholtz.] Probably you could prove all these same things using a KG or Dirac equation to replace the SE. But I am getting off topic. It is nice to see Stak do the basics here with a completely general Helmholtz equation without regard to where it came from. At some point I will do some integration.

It is natural now to examine the small and large ω limits of our results.

The Small ω Behavior

He suggests expanding the induced source density as power of ω with coefficients $A_n(x)$, and expanding the u_i plane wave as well in the very obvious manner. Putting these into the integral equation $u_i = \int dS\ E$ I, we can balance powers of ω on both sides. For $\omega = 0$ we are going to get electrostatics results and A_0 must be charge density σ as in 7.261. Each power gives you an integral equation for A_n in terms of A_{n-1}, so you have to build your way up through these coefficients. They alternate real and imaginary. Using the same expansion in D from 7.259, we get p 305 B and eventually p 306 A and we find that for small ω, you can write $D = C^2/4\pi$ where C is the capacitance of your object! That is new to me, I don't recall ever seeing such a low frequency claim made before.

The Large ω Behavior

This is a slightly strange section. Stak says that doing a power series in 1/ω does not fly, so his work here is ad hoc. First he considers scattering of a plane wave off a **mirror**, which he refers to as a "screen", I think that being a traditional word. First he shows p 308 A which I agree with, and will add a derivation here soon. Then he assumes that our mirror situation has the form B and he solves for A. So here is the complete solution u: ($\mathbf{x}_0$ is any point on the mirror, $\boldsymbol{\alpha}$ and $\boldsymbol{\alpha}^*$ are the incoming and reflected wave directions, $\mathbf{n}$ is the normal to the mirror, ω is the frequency or Helmholtz $\lambda = \omega^2$)

$$u = e^{i\omega \mathbf{x}.\boldsymbol{\alpha}} + A\, e^{i\omega \mathbf{x}.\boldsymbol{\alpha}^*}$$

$$A = -\, e^{2i\omega\ \boldsymbol{\alpha}.\mathbf{n}\ \mathbf{x}_0.\mathbf{n}} \qquad \text{// to make } u = 0 \text{ on the mirror surface,}$$

So put this in to see what we get for u:

$$u = e^{i\omega \mathbf{x}.\boldsymbol{\alpha}} + A\, e^{i\omega \mathbf{x}.\boldsymbol{\alpha}^*}$$

$$= e^{i\omega \mathbf{x}.\boldsymbol{\alpha}} + [-\, e^{2i\omega\ \boldsymbol{\alpha}.\mathbf{n}\ \mathbf{x}_0.\mathbf{n}}\ ]\ e^{i\omega \mathbf{x}.\boldsymbol{\alpha}^*}$$

$$= e^{i\omega x.\alpha} - e^{i\omega\ 2\alpha.n\ x0.n}\ \ e^{i\omega x.\alpha^*}$$

$$= e^{i\omega x.\alpha} - e^{i\omega\ 2\alpha.n\ x0.n}\ \ e^{i\omega x.\alpha^*}$$

This seems very strange. We have unit amplitude coming in, but the reflected amplitude has a strange phase (unit magnitude) which is a function of x_0 in the mirror. It has to be exactly as shown to get u=0 on the mirror. I could try to simplify this a bit

$$= e^{i\omega x.\alpha} - e^{i\omega\ x0.[\ 2\alpha.n\ n\ ]}\ e^{i\omega x.\alpha^*}$$

$$= e^{i\omega x.\alpha} - e^{i\omega\ x0.[\ \alpha-\alpha^*\ ]}\ e^{i\omega x.\alpha^*}$$

$$= e^{i\omega x.\alpha} - e^{i\omega\ x0.[\ \alpha-\alpha^*\ ]}\ e^{i\omega x.\alpha^*}$$

$$= e^{i\omega x.\alpha} - e^{i\omega\ x0.\alpha}\ e^{i\omega x.\alpha^* - i\omega x0.\alpha^*}$$

$$= e^{i\omega x.\alpha} - e^{i\omega\ x0.\alpha}\ e^{i\omega(x-x0).\alpha^*}$$

I don't know what to say about this without writing in some angles. If $\mathbf{x_0} = 0$ (mirror passes through the origin), then A = -1 and we have

$$u(\mathbf{x}) = e^{i\omega x.\alpha} - e^{i\omega x.\alpha^*}$$

If we evaluate this at $\mathbf{x} = 0$, we have to get 0 and do. So it's just that the two beam phases have to cause a cancellation on the screen. OK, enough. I agree with D,E and F. His purpose here is F where he gets an expression for $\partial u/\partial n$ which is the definition of our surface source I. So he installs this into G for I, with reference to a simple convex scatterer like a sphere or ellipsoid. Since we know I, we know everything. He assumes I = 0 on the shadow side, and from 7.259 bang, we find that the cross section is twice the projected area of the object. This factor of 2 is a famous one and is addressed by Schiff page 126. The idea roughly is that you need one area's worth of cross section to make the scattering, and another area's worth to create the forward direction shadow. It is really a sort of deficiency of the way the problem is "set up". Strangely Stak makes no comment at all about this mysterious factor of 2.

Stationary Principle for the Cross Section.

This is a "technical detail" section as far as I am concerned. The idea is this. Suppose you can't exactly solve your integral equation for $I_\alpha(x)$, where α is the direction of your incoming plane wave. Suppose you come up with some kind of approximation for I_α. Then 7.268 is an approximation for A(α,α) and thus for cross section D. Stak shows that you can get a better formula for A(α,α) as in 7.277 which is insensitive to errors you have made in your approximation for I_α. You just install $u = I_\alpha$ and $v = I_{-\alpha}$ into 7.277 and this is supposed to give you an improved estimate for A(α,α) and D. I have not bothered to track through this section, it sounds reasonable, and it falls into the realm of scattering approximation theory. My PDF (djvu?) search says that he is never going to use this result.

Final Exam Part I: (the last 4 problems are after the WH section below)

Today Dec 11, 2011 I am just *reading through* all the problems of this final exam. At some point I will do some of them, and insert notes here or in separate docs.

Exercise 7.44 (p 326, read only). Surface approach, extra term, Fred 2 instead of Fred 1 for I.

If you apply a normal-approach-to-point-s ∂_ν operation onto 7.249, and then take the limit $x \to s$ on σ, that "extra term" pops up just as it did back in Chapter 6. I think we are approaching from the exterior of our scattering type object, and I think that $I(s) = \partial_\nu u$ at the boundary since there is doubtless no source on the inner surface. Then $\partial_\nu u_s = \partial_\nu(u-u_i) = \partial_\nu u - \partial_\nu u_i = I(s) - \partial_\nu u_i$ and then we have in p 327 A a full I(s) on the left and a half I(s) on the right and this gives exactly 7.309. This same issue came up on page 172 in the Laplace analysis with perhaps some sign difference, see also the start of my raw 2 notes and perhaps Ch 6 meta notes. So the upshot is that you can have a **Fred 2** integral equation for I(s) instead of the Fred 1 equation 7.250! We know that such equations are always easier to handle, though Stak does not comment here on that fact.

Exercise 7.45 (p 327, read only) Same idea on a shell surface, getting I+ and I- separately.

We repeat the last problem for an **open shell** where we can then have source on both sides, so things are then a little different and we get a new version of 7.309 as p 327 B. He claims that if you use this and the Fred 1 7.250, you can deduce the separate I_+ and I_- contributions. I don't care much about open shells today, so I won't do this problem.

Exercise 7.46 (p 327, partial) Redo scattering theory for Neuman BC on scatterer surface.

Here we are asked to redo "everything" in our **scattering** analysis using the **Neumann** $\partial_n u = 0$ on σ instead of the Dirichlet u= 0 on σ. We would start I guess on page 300. There would be a change in 7.247 that I think is pretty clear, then we have to take it from there. This of course would force me to verify all the stuff in that section which I skipped over!

Exercise 7.47 (p 327, read only). 2D scattering from a circle-shaped u=0 scatterer.

In the text, we considered scattering in 3D off some localized obstacle with boundary σ and developed the integral equation method etc. Here Stak wants us to redo this in 2D. Then in particular, he wants us to examine **2D plane wave scattering off a circle** (σ) with u=0 on this circle. This would apply to the real world with plane wave scattering from an infinite cylinder if the plane wave k vector is normal to the cylinder axis vector. I think this would be a 2D canonical scattering problem and of course the origin would be put at circle center and we might as well have our incoming wave coming in along some axis like the x axis. Polar coordinates would be appropriate.

Exercise 7.48 (p 327, read only). More on 2D scattering from a circle.

We are now asked to find a series for the scattering **cross section** in the above 2D problem. Perhaps that means the ω series, or perhaps it will just be a trig series. A good problem. I could do all these problems, but it would be more weeks! Just reading and understanding the problems I feel is still useful.

Exercise 7.49 (p 327, read only) Point charge off end of half-plane (a 3D problem)

Earlier we studied a line charge off the end of a half plane, which was really the 2D problem of a point charge off the end of a half line. Here, however, we want to do the harder 3D problem of a ***point*** **charge off the end of a half plane** sitting at x = -a. I agree with the Helmholtz Green's problem statement p 327 C. We assume Dirichlet so v=0 on both sides of the half plane. I agree that if you apply the z FT projector to both sides of the PDE, the result will look like 7.295 with a new k. But then we are supposed to use some result in the Weiner-Hopf section to obtain the current on the half-plane as shown p 328 A which involves a K'_0 function. We are then to take the electrostatics limit. I am not sure Stak or I have ever done this electrostatics canonical problem. It shows the expected $1/\sqrt{x}$ blowup at the edge for the charge density. I still don't quite get the connection between H source as current and L source as charge density. This would be a good problem to do.

Exercise 7.50 (p 328, read only) Plane wave hits u=0 screen with aperture head on, 3D problem,

This is a 3D "screen with **aperture** A" problem, plane wave coming in from the left z < 0, the screen at z = 0 and u=0 on the screen. Stak replaces the solution u with a different function v which is "small" in a certain sense (it vanishes as A→0). We are then to restate our integral equation stuff in terms of this v and its current J (rather than u and its current I), and the result should be p 328 F. Stak claims that if you know v in the hole, you know it everywhere. Another one to do! This sounds like a very canonical optics diffraction problem !!

Exercise 7.51 (p 328, read only) Repeat above with Neumann screen and aperture.

Repeat the previous **aperture** problem with $\partial_n u = 0$ on the screen. Somehow we are then supposed to connect this to diffraction of a disk that matches the aperture. These are classic problems indeed!

Exercise 7.52 (p 329, read only) A diffusion problem with absorption.

This was discussed in Ex 7.12 on page 240. Here k^2 is the time transform variable (replacing ∂_t etc). The term cu of 7.12 must be this thing $-k_0^2(x)$, but the sign seems wrong for absorption according to the p 240 text. But I think he is trying to set up a situation where absorption occurs only inside the region R. We have some solute and it is getting consumed inside R at a rate which is position dependent. We also have a point source of solute outside R. It would have been nice if Stak had related this to a real world situation of nuclear physics or chemistry or whatever he has in mind. Since this is a 2-media problem, it is not clear how you solve the exterior Green's function problem. He claims you can relate u at any exterior point to the values of u inside R with an integral equation deal. OK, another day at least to do this I would guess. All are good.

Exercise 7.53 (p 329, read only) 2D Neumann partially blocked waveguide problem.

This is a **2D waveguide that is half blocked** by a line segment. As usual we can think of this as a 3D problem between two infinite parallel plates with a half-blocking plate. We inject a plane wave from the left side z < 0 and watch what happens. The wave is going to diffract through this aperture. We are asked

some questions concerning an integral equation for this situation. On all surfaces we assume $\partial_n u = 0$ Neumann.

Exercise 7.54 (p 330, read only) Compute the integral shown p 325 B.

The problem here is to do a certain integral. The result of the integral was used in the main line text on p 325 B. It is one of the sum-splitting integrals in **WH** Example 2.

Exercise 7.55 (p 330, read only) Convert the Example 1 integral equation to ODE and solve.

Another way to find the solution.

Exercise 7.56 (p 330, read only) Half line with plane wave from above, use WH method.

A Weiner-Hopf problem. Stak's Example 2 used a point source off the left end of a half line. Here we use a different source: a plane wave flowing perpendicular to the half line. Our task is again to compute the current on the half-line, and results are given.

Exercise 7.57 (p 331, read only) Solve a certain 2D Helmholtz problem using the WH method.

Another **Weiner-Hopf** problem. We are given a Helmholtz problem for the upper half x-y plane. The BC's are that $\partial_n u = 0$ for the negative x axis, but $u = e^{-\varepsilon x}$ for the positive x axis. No physical motivation is provided for this problem, nor is the solution stated.

Section 7.16 The Wiener-Hopf Method (311)

This has been a long time coming. We open with the statement of a generic 1D Fred 2 integral equation having a difference kernel. He notes that we can apply all our Chapter 3 methods to this problem as with any kernel, but here we will do something different. At least one endpoint has to be infinite for this to work.

Interval (-∞,∞)

As I well know, in this case the Fourier Transform diagonalizes the integral equation and allows us to have a trivial statement of the solution in Fourier space, as shown in 7.280, which I think should be thought of as a particular solution of p 312 A. Then the f=0 equation might have homogeneous solutions which you would then have to add in I suppose. Suppose the function $[k\hat{}(\omega)-\mu] \sim (\omega-\omega_0)$ near some point ω_0, which is to say, it has a zero there. Then at ω_0 we are going to have $[k\hat{}(\omega)-\mu]\, u\hat{}(\omega) = 0$ which says we have a homo solution back in x space. Now one possible form for solution $u\hat{}(\omega)$ near this ω_0 value would be $u\hat{}(\omega) = c\,\delta(\omega-\omega_0)$ since then $[k\hat{}(\omega)-\mu]\, u\hat{}(\omega) \sim (\omega-\omega_0)\,\delta(\omega-\omega_0) \sim 0$. So if we consider then this possible homo solution, back in x space it becomes the plane wave shown in C, so our homo solutions seem to be plane waves with ω_0 as the k vector. He then shows that if you have instead a zero of order p, you get for your homo solution a linear combination of plane waves each multiplied by a power of x. Note that we are in 1D here, so plane wave is probably not the right term. A phasor.

Stak then does a little example where k(x) = exp(-|x|) and considers various values of μ (1, 2, <0) to get different kinds of zeros (and homo solutions for u) in quantity k-μ. In the last case μ < 0 there is no homo solution because it diverges, so for μ < 0 you get only the particular solution. He then gets the particular solution as shown page 313 J for the case μ = -1/4 (as noted, no homo solutions in this case).

Interval (0,∞)

This is the realm of Weiner-Hopf, kernel is still a difference kernel and k is defined on (-∞,∞) in order for our integral equation to even be consistent. We have functions k, u and f. u and f are really only defined on the right, x>0. We shall extend f and u to be zero on the left, so we can say $f_+(x) = H(x) f(x)$ and $u_+(x) = H(x) u(x)$. Now look at p 314 A. If we install a negative x value inside k, we must get *something* for our integral! Whatever you get is g(x) and then g(x) is only defined for x < 0. If x > 0 we know what we get. So let $g_-(x) = H(-x)g(x)$. So f and u are right sided, while g is left sided. We can then write both equations of p 314 A as a single Fred 2 equation in 7.285. Now the magic is that our integral range is back to (-∞,∞) and the function we want to solve for is $u_+(x)$ and we see the inhomo driving term there.

Note before continuing that Re(iz) = Re(i[x+iy]) = Re(-y) = -y = -Im(z).

Now we are going to be looking at the complex ω plane (the Fourier conjugate variable), and we want things like k^(ω) to "exist" there in certain regions of the ω plane. If k(x) goes as $e^{-c|x|}$ for large x, the Fourier projection will converge (thus exist) if $e^{-c|x|}\, e^{+i\omega x}$ decays, which means Re(iω) < c, or -Im(ω)<c or Im(ω) > -c in the case x>0. If x <0, let y = -x > 0 and we have $e^{-cy}\, e^{-i\omega y}$ so need Re(-iω) < c, or +Im(ω) < c. This says that ω has to lie within a strip lying between Im(ω) = +c and -c, and then we know that k^(ω) exists. Notice that we have to worry about both ±∞ limits for x for function k.

For function g(x), we need only worry about the -∞ limit and that gives Im(ω) < c, where we assume the same large x form for g as we did for k.

For function u(x) we will allow $e^{+d"x}$ and only x>0 is of concern. For u^(ω) to exist we have then to consider $e^{+d"x}\, e^{+i\omega x}$ which says Re(iω) < -d", or -Im(ω) < -d" or Im(ω) > d".

I agree that if we set d = max(d',d"), then all four projections exist for the strip d < Im(ω) < c.

So I am happy with page 314. The upshot is that we are able to write our integral equation in standard convolution form, where all functions appearing are one-sided functions. If we assume large x behavior bounded as in (1) through (4), then I agree with all the conclusions on analyticity of the Fourier Transforms of the one-sided functions. We find that one of the functions is analytic in a lower half plane (that one is g_-), two others are analytic in upper half planes, while k is analytic in a certain strip. This then is all displayed on page 315. As expected, "plus functions" are analytic in an upper half plane, while "minus functions" are analytic in a lower half plane. The boundary of the half plane depends on the assumed large x behavior bound for any given function.

Our goal at the start was just to find solution u(x) of p 314A, a non-convolution form equation. But while we're at it, we will also find g(x). This has the *flavor* of Sneddon's dual integral equation stuff.

Aside on Liouville's Theorem. It says that any function f(z) which is analytic in the entire z plane and which is bounded must be a constant. Proof on wiki or Ahlfors p 122, proof is very simple.

Outline of Weiner Hopf. We adjust our Fourier diagonalized equation 7.286 so that one side has all plus functions and the other all minus functions, and such that the half planes overlap. We then have some equation $H_+(\omega) = I_-(\omega)$. Since we have a strip of overlap, these two functions are analytic continuations

of each other (and are thus parts of some E(ω) analytic everywhere) and this fact is somehow going to get us our solution. The H and I functions are not unique to arrive at and H = I equation like this.

Here is one way things might resolve. You know there is a function E(ω) analytic on the entire ω plane, and in the upper half of the region it is $H_+(\omega)$ and in the lower half it is $I_-(\omega)$. Suppose you know that $H_+(\omega) \rightarrow$ constant going up, meaning $E(\omega) \rightarrow$ constant there. Since E(ω) has no poles or other infinite things (it is analytic), it must be bounded in the upper half plane. This is not enough, however, to invoke Liouville above, because it could be unbounded in the lower half plane. So, suppose you ALSO know that $I_-(\omega) \rightarrow$ constant' in the lower half plane. Then you know E(ω) is bounded everywhere and by Liouville it must be a constant. It is common to find that constant = constant' = 0, in which case you know that $E(\omega) \equiv 0$. This means that $H_+(\omega) = 0$ and $I_-(\omega) = 0$, and each of these equations can then be solved and you will get your problem solution. So that is the main plan of WH !

Stak then gives a quick derivation of a possible H and I function pair. This involves first a "quotient split" of the function k^(ω)-μ, and then a "sum split" of a certain function, and we arrive at 7.289! Notice all plus functions on the left and all minus functions on the right.

Stak is now going to pause to discuss these various splittings, since they are certainly not very obvious.

A simple paradox and its resolution. Consider the Cauchy theorem and assume f(z) is analytic inside a finite region which contains contour C which in turn contains point w. Why can't you conclude that f(z) is analytic for all w by the following argument: the contour hits no singularities of f(z) for sure, so "nothing funny" happens with the contour hitting poles etc. The denominator is analytic for all w except for w = z, but the contour stays away from w = z so it does not encounter this pole. Therefore, for *any* w, everything is smooth. Thus, f(w) [as defined by the integral below] ought to be analytic for all w. Again, the two motivating reasons here: (1) the one place w appears is the denominator, and that factor is analytic since contour stays away from w; (2) the contour is clean.

$$f(w) = (1/2\pi i) \int_C dz\, f(z)/(z-w)$$

First, here is a trivial counter example. Suppose f(z) = 1/(z-a) where a lies outside the contour C. Then clearly f(z) is not analytic everywhere, since it has a pole at z = a. Yet all the facts stated above are true. So the "intuitive" conclusion above simply does not follow. The Cauchy theorem is only true for w inside the contour C. If you try to extend the equation shown above to w outside the contour, it is NOT true unless you can enlarge the contour without hitting anything so w stays inside. Another way to think of it. Start with w inside the contour where equation is true. Then try to move w outside the contour with C fixed. You cannot "analytically continue" the point w *through* the contour because the integrand diverges at the point where w hits the contour. Your only hope is to move the contour out of the way, and as just noted, that works fine unless it hits something. In our example, the contour encounters the pole at z = a so that point cannot get into the interior of the contour, so w cannot be set equal to that point, so the equation won't be true in a small neighborhood of the point z = a.

Sum Splitting (316)

The claim here is that you can split a function a(ω) into two pieces as shown, provided $a(\omega) \rightarrow 0$ for large ω, and a(ω) is analytic in a certain horizontal strip of the ω plane. Each of the two pieces has a certain half-plane analyticity. It took me a day and a half to get this stuff cleared up, and it is indeed much more

complicated than Stak lets on. See "analytic functions defined by integral.doc" for details. On page 317 Stak does a very simple example of such a separation.

There is a certain notational confusion here regarding ± . On the one hand, we use $f_+(x)$ to denote a one sided function which vanishes for x<0. And we use $\hat{f}_+(\omega)$ to denote the FT of that one sided function. And we observe that such an $\hat{f}_+(\omega)$ function is analytic in an upper half plane. But then later we use the notation $a_+(\omega)$ to refer to "any function which is analytic in an upper half plane", even though this may not be a FT of anything in particular. Thus, the plus label has two distinct meanings in this chapter. I think in some literature, this second use of ± (analyticity in half planes) is used and one talks in this sense about a "plus function" and a "minus function", see eg the Hojuwen pdf.

Quotient Splitting (318).

This is just done using sum splitting and logs. Another horrible typo, but has been fixed in 2000. Very simple. The conditions on the functions get slightly altered due to the log stuff.

Examples of Wiener-Hopf (318). **// last section of Chap 7 !!!**

Example 1: an academic example.

We have here a certain integral equation where

$$k(x) = e^{-|x|},\ \mu = -1/4,\ f(x) = 1.$$

Step 1. Find c and d. Our first task is to determine the values of "c and d" encountered on pages 314-315 for this example.

For k(x), c = 1, that one is very obvious.

For f(x), d' = 0, again obvious.

For u(x) we have to do some work using the arranged form p 318E. It is not exactly clear how this goes and Stak skips this piece of work. I will try it: [here we will show crudely that d" = 0]

$$u(x) = 4 - 4\int_0^\infty d\xi\, e^{-|x-\xi|}u(\xi)$$

$$= 4 - 4\int_0^x d\xi\, e^{-(x-\xi)}u(\xi) - 4\int_x^\infty d\xi\, e^{-(\xi-x)}u(\xi)$$

$$= 4 - 4e^{-x}\int_0^x d\xi\, e^{\xi}u(\xi) - 4e^{x}\int_x^\infty d\xi\, e^{-\xi}u(\xi)$$

What next? Suppose we assume that $u(\xi) \sim e^{d''\xi}$ and try to find d". Then we have

$$\sim 4 - 4e^{-x}\int_0^x d\xi\, e^{\xi}\, e^{d''\xi} - 4e^{x}\int_x^\infty d\xi\, e^{-\xi}\, e^{d''\xi}$$

$$\sim 4 - 4e^{-x} \int_0^x d\xi\, e^{\xi(1+d")} - 4e^{x} \int_x^\infty d\xi\, e^{\xi(d"-1)}$$

$$= 4 - 4e^{-x} (d"+1)^{-1} [\, e^{x(1+d")} - 1] - 4e^{x}(d"-1)^{-1}[\, 0 - e^{x(-1+d")}] \qquad \text{// had to assume } d" < 1 \text{ !}$$

$$= 4 + O(e^{-x}) + 4(d"+1)^{-1}e^{xd"} + 4\,(d"-1)^{-1}\, e^{d"x}$$

$$= 4 + 4(d"+1)^{-1}e^{xd"} + 4\,(d"-1)^{-1}\, e^{d"x} \qquad \text{// assume } d" > -1$$

$$= 4 + 4e^{xd"}\{\, 2d"/(d"^2-1)\,\}$$

So we end up with this general requirement

$$e^{d"x} = 4 + 4e^{xd"}\{\, 2d"/(d"^2-1)\,\}$$

Let d" = a for the moment so we have

$$e^{ax} = 4 + 4e^{ax}\{\, 2a/(a^2-1)\,\}$$

We can isolate e^{ax} to get

$$e^{ax} = 4\,(\,a^2-1)/(a^2-1-2a)$$

Our only chance seems to be a = 0, in which case we get

$$1 = 4\,(-1)/(-1) = 4$$

and maybe this is consistent since we have ignored constant scaling of terms. So by this very crude argument, we claim d" = 0. If we sneak a peak at the solution 321 B, we see that this is correct!

For $g_-(x)$ we have for $x < 0$:

$$g_-(x) = \int_0^\infty d\xi\, e^{-|x-\xi|}u(\xi)$$

In this case, replace x by $-y > 0$ to get

$$g_-(-y) = \int_0^\infty d\xi\, e^{-|-y-\xi|}u(\xi) = \int_0^\infty d\xi\, e^{-(y+\xi)}\, u(\xi) = e^{-y} \int_0^\infty d\xi\, e^{-\xi}\, u(\xi) = K\, e^{-y}$$

Therefore we have $g_-(x) \sim e^{x} = e^{-|x|}$ and again we have c = 1 according to 314 (4). But this is true in all cases, here we have just verified it in this case.

So we have

$c = 1 \qquad d' = 0 \quad d'' = 0 \qquad d = \max(d',d'') = 0$

So we conclude that c = 1 and d = 0 and these then mark the top and bottom of our strip of analyticity which he shows on page 319.

Step 2: Compute all the Fourier transforms. I have already checked these (error p 319 A which Stak has fixed in the 2000 book).

$f^{\wedge}_{+}(\omega) = i/\omega \qquad k^{\wedge}(\omega) = 2/(1+\omega^2)$

Now our general diagonalized equation is 7.286 and we can plug in our parts

$[k^{\wedge}(\omega)-\mu]\ u_{+}^{\wedge}(\omega) = f_{+}^{\wedge}(\omega) + g_{-}^{\wedge}(\omega)$

$[2/(1+\omega^2)+1/4]\ u_{+}^{\wedge}(\omega) = i/\omega + g_{-}^{\wedge}(\omega)$

Here i/ω is $f_{+}^{\wedge}(\omega)$ which is a plus function relative to strip page 319. Rewrite as in 7.293

$[(9+\omega^2)/4(1+\omega^2)]\ u_{+}^{\wedge}(\omega) = i/\omega + g_{-}^{\wedge}(\omega)$

Remember that due to our derived behaviors, we know all functions appearing here are analytic in the strip from 0 to 1. So we have an equation now to work with.

Step 3: Apply quotient split. The first factor has poles at $\omega = \pm i$ and is certainly analytic in our strip as page 319 picture shows. But we want to break this factor up into a quotient of plus and minus functions so we can continue to do our isolation to the separate sides. [We now start page 320.] So we have

$b(\omega) = [(9+\omega^2)/4(1+\omega^2)] = b_{+}(\omega) / b_{-}(\omega)$

We see $b(\omega)$ is analytic in our strip. To do this thing formally, we would have to do this

$a(\omega) = \ln [(\omega^2+9)/4(\omega^2+1)] = \ln(\omega+3i) + \ln(\omega-3i) - \ln(4) - \ln(\omega+i) - \ln(\omega-i)$

$= \{ \ln(\omega+3i) - \ln(\omega+i) - \ln(4)\} + \{ \ln(\omega-3i) - \ln(\omega-i)\} = a_{+}(\omega) + a_{-}(\omega)$

where I have partitioned so the first group analytic above the (0,1) strip, second below. Then we have

$a_{+}(\omega) = \ln[(\omega+3i)/4(\omega+i)] \qquad a_{-}(\omega) = \ln[(\omega-3i)/(\omega-i)]$

$b_{+}(\omega) = (\omega+3i)/4(\omega+i) = k_{+} \qquad b_{-}(\omega) = (\omega-i)/(\omega-3i) = k_{-}$

And so I have derived p 320 A,B,C using the quotient splitting theory. I can see that "inspection" is a faster way to do this perhaps, but I used the sure fire method. So at this point we have

$$[(9+\omega^2)/4(1+\omega^2)]\ u_+\hat{}(\omega) = i/\omega + g_-\hat{}(\omega)$$

$$[\ k_+(\omega)/\ k_-(\omega)]\ \ u_+\hat{}(\omega) = i/\omega + g_-\hat{}(\omega)$$

$$k_+(\omega)\ u_+\hat{}(\omega) = k_-(\omega)\ i/\omega + k_-(\omega)\ g_-\hat{}(\omega)$$

Notice of course that a product of plus functions is a plus function. We can install our results to get

$$(\omega+3i)/4(\omega+i) * u_+\hat{}(\omega) = (\omega-i)/\ (\omega-3i) * i/\omega + (\omega-i)/\ (\omega-3i) * g_-\hat{}(\omega) \qquad // 7.294$$

Now our only problem term is $k_-(\omega)\ i/\omega = k_-(\omega)\ f\hat{}_+(\omega)$. We want to do a sum split on this thing.

Step 4: do the sum splitting.

$$a(\omega) = i\ (\omega-i)/\ [\omega(\omega-3i)]$$

Just for fun, let's try applying our sum splitting theory. The first term integral is along strip bottom Imω=0 and we would then have

$$a_+(\omega) \equiv\ (1/2\pi i)\ \int_{-\infty}^{+\infty} d\alpha\ a(\alpha)\ (\alpha-\omega)^{-1}$$

$$= (1/2\pi i)\ \int_{-\infty}^{+\infty} d\alpha\ \{\ i\ (\alpha-i)/\ [\alpha(\alpha-3i)]\}\ (\alpha-\omega)^{-1}$$

We want the f_1 branch so we put ω above the contour and close down. The contour by the way runs just above the pole at α=0 so we will pick up this residue which is the only one. Here we go:

$$= -\ \mathrm{Res}[\{\ i\ (\alpha-i)/\ [\alpha(\alpha-3i)]\}\ (\alpha-\omega)^{-1}]|^{\alpha=0}$$

$$= -\ [\{\ i\ (\alpha-i)/\ [(\alpha-3i)]\}\ (\alpha-\omega)^{-1}]|^{\alpha=0}$$

$$= -\ [\{\ i\ (-i)/\ [(-3i)]\}\ (-\omega)^{-1}]$$

$$= -\ [\{1/\ [(3i)]\}\ (\omega)^{-1}]$$

$$= -1/(3i\omega) = i/3\omega$$

which is a plus function and which agrees with the first term in p 320 E ! Now we can do the other term as follows:

$$a_-(\omega) \equiv\ -\ (1/2\pi i)\ \int_{-\infty+i}^{+\infty+i} d\alpha\ \{\ i\ (\alpha-i)/\ [\alpha(\alpha-3i)]\}\ (\alpha-\omega)^{-1}$$

where we now place ω below the contour. We close up. The only pole up top is at α = 3i, so

$= -\text{Res}[\{ i(\alpha-i)/[\alpha(\alpha-3i)]\}(\alpha-\omega)^{-1}]|^{\alpha=3i}$

$= -[\{ i(\alpha-i)/[\alpha]\}(\alpha-\omega)^{-1}]|^{\alpha=3i}$

$= -[\{ i(3i-i)/[3i]\}(3i-\omega)^{-1}]$

$= -[\{ (3i-i)/[3]\}(3i-\omega)^{-1}]$

$= -2i/[3(3i-\omega)] \quad = +2i/[3(\omega-3i)]$

which we see is a minus function, and which also agrees with p 320 E. Stak got this splitting just doing partial fractions (by inspection), but I did it with the full blown splitting method, and we get the same splitting. So we have shown that

$(\omega-i)/(\omega-3i) * i/\omega \;=\; i/3\omega \;+\; 2i/[3(\omega-3i)]$

and we insert this into our 7.294 above to get

$(\omega+3i)/4(\omega+i) * u_+\hat{}(\omega) = (\omega-i)/(\omega-3i) * i/\omega + (\omega-i)/(\omega-3i) * g_-\hat{}(\omega)$ // 7.294

$(\omega+3i)/4(\omega+i) * u_+\hat{}(\omega) = i/3\omega + 2i/[3(\omega-3i)] + (\omega-i)/(\omega-3i) * g_-\hat{}(\omega)$ // 7.294
$\quad + \quad + \quad + \quad - \quad - \quad -$

Step 5: segregate and example large ω limits for E(ω) to show E = 0

Now every term is either a plus or minus function, so we segregate to the two sides

$(\omega+3i)/4(\omega+i) * u_+\hat{}(\omega) - i/3\omega = 2i/[3(\omega-3i)] + (\omega-i)/(\omega-3i) * g_-\hat{}(\omega)$ // page 320 F

Now recall that $u(x) \rightarrow e^0$ from our Step 1 work, so what do we know about $u_+\hat{}(\omega)$ for large ω?

$$u_+\hat{}(\omega) = \int_0^\infty dx\, u_+(x) e^{i\omega x}$$

I could try my stationary phase method. Recast this way

$$I(x) = \int_0^\infty dt\, u_+(t) e^{ixt} \qquad \psi(t) = t \qquad f(t) = u_+(t)$$

Then our standard answer is

$$I(x) \sim \{u_+(t)/[ix] * e^{ixt}\}|^\infty_0 = \{\text{const}/[ix] * e^{ix\infty}\} - \{u_+(0)/[ix]\}$$

As usual we use our distribution theory to argue that $e^{ix\infty} = 0$ and we get just the second term, [well, in the first term we might get const/ix * unknown which is still order 1/x at worst]

$I(x) \sim \{u_+(0)/ [ix]$

which then tells us that

$u_+\hat{}(\omega) \sim \{u_+(0)/i\omega \}$ so that $u_+\hat{}(\omega) \sim 1/\omega$

This agrees with Stak's claim bottom page 320, and with the exact result p 320 G.

What about $g_-\hat{}(\omega)$?

$$g_-\hat{}(\omega) = \int_{-\infty}^{0} dx\, g_-(x) e^{i\omega x} = \int_{0}^{\infty} dy\, g_-(-y)\, e^{-i\omega y}$$

I think we apply the same method as above, now $\psi(t) = -t$ and $f(t) = g_-(-t)$ and we reach the same $1/\omega$ conclusion! I guess this is a general property of FT's as long as $f(x=0) \neq 0$, in which case it decays faster than $1/\omega$, and maybe you also need $f(\infty) <$ const to make the first term vanish, and I guess you need this anyway to get the FT integral to converge.

SO, the LHS of p 320E $\rightarrow 0$ at large ω and so does the RHS, so conclude that $E(\omega) = 0$ which means each side is separately 0. At once this gives us solutions for $u_+\hat{}(\omega)$ and $g_-\hat{}(\omega)$.

Step 6: do the inverse FT to get answer for u(x). We get

$u_+\hat{}(\omega) = (4i/3)\, (\omega+i)/[\omega(\omega+3i)]$

$g_-\hat{}(\omega) = 2i / [\, 3(\omega-i)\,]$

which he does not state.

Now recall our FT work where we had

$$f\hat{}(\omega) = (1/2\pi) \int_{-\infty}^{\infty} dx\, e^{+i\omega x} f(x)$$

$e^{-\nu x} f(x)$ has a finite L_1 norm, so is in $\mathcal{L}(-\infty,\infty)$

$$f(x) = (1/2\pi) \int_{-\infty+i\nu}^{\infty+i\nu} d\omega\, e^{-i\omega x} f\hat{}(\omega)$$

For us, $f = u_+$ and we know that $u_+(x) \rightarrow$ const for large x, so add a tiny ν and then $e^{-\nu x}\, u_+(x)$ will be finite L_1 norm. Stak refers to this ν as a, and that then is where we get p 321 A for $u_+(x)$, where he has inserted. He has to close *down* and will then pick up three two residues:

$$u(x) = -(4/3) \{ (-) \text{Res}[\, e^{-i\omega x} (\omega+i)/[\omega(\omega+3i)]\,]|^{\omega=0} - \text{Res}[\, e^{-i\omega x} (\omega+i)/[\omega(\omega+3i)]\,]|^{\omega=-3i} \}$$

$$= -(4/3) \{ - [\, e^{-i\omega x} (\omega+i)/[(\omega+3i)]\,]|^{\omega=0} - [\, e^{-i\omega x} (\omega+i)/[\omega]\,]|^{\omega=-3i} \}$$

= -(4/3) { - [1 (0+i)/[(0+3i)]] - [$e^{-i(-3i)x}$ (-3i+i)/[-3i]] }

= -(4/3) { - 1/3 - [e^{-3x} (-2i)/[-3i]] }

= (4/3) { + 1/3 + [e^{-3x} (-2)/[-3]] }

= (4/3) { + 1/3 +(2/3) e^{-3x} }

= (4/9) { 1 + 2 e^{-3x} } // agrees with p 321 B !

So this concludes a very detailed 3-page example in which we solve the integral equation 7.292 using the WH method and find the solution to be p 321 B.

Note added: Concerning the v offset business. I think the point is that if you have a function like $u_+(x)$ which is known to be 0 for all x < 0, then the function $e^{-vx}\,u_+(x)$ just gets more convergent as you make v more positive, so you can choose any v you want as long as it converges $e^{-vx}\,u_+(x)$ for x > 0. In our example here that meant any v > 0 was OK.

Step 7: Check with Polyanin. Polyanin on p 323 seems to have a different method

12. $y(x) + \lambda \int_0^\infty e^{-|x-t|} y(t)\,dt = f(x).$

Solution:

$$y(x) = f(x) - \frac{\lambda}{\sqrt{1+2\lambda}} \int_0^\infty \exp\left(-\sqrt{1+2\lambda}\,|x-t|\right) f(t)\,dt + \left(1 - \frac{\lambda+1}{\sqrt{1+2\lambda}}\right) \int_0^\infty \exp\left[-\sqrt{1+2\lambda}\,(x+t)\right] f(t)\,dt,$$

where $\lambda > -\frac{1}{2}$.

⦿ Reference: F. D. Gakhov and Yu. I. Cherskii (1978).

where we would have λ = +4 and f(x) = 4. Polyanin's answer would then be

y(x) = 4 - (4/3) $\int_0^\infty$ dt exp(-3|x-t|) 4 + (1-5/3) $\int_0^\infty$ dt exp(-3(x+t)) 4

= 4 - 4(4/3) $\int_0^\infty$ dt exp(-3|x-t|) + 4(-2/3) $\int_0^\infty$ dt exp(-3(x+t))

= 4 - (16/3) $\int_0^\infty$ dt exp(-3|x-t|) - 8/3 e^{-3x} $\int_0^\infty$ dt exp(-3t)

$= 4 - (16/3) \int_0^x dt \exp(-3(x-t)) - (16/3) \int_x^\infty dt \exp(-3(t-x)) - 8/3\, e^{-3x}(1/3)$

$= 4 - (16/3)e^{-3x} \int_0^x dt \exp(3t) - (16/3)e^{3x} \int_x^\infty dt \exp(-3t) - 8/3\, e^{-3x}(1/3)$

$= 4 - (16/3)e^{-3x}\{(1/3)(e^{3x}-1)\} - (16/3)e^{3x}\{(1/3)e^{-3x}\} - 8/3\, e^{-3x}(1/3)$

$= 4 - (16/3)\{(1/3)(1-e^{-3x})\} - (16/3)\{(1/3)\} - 8/3\, e^{-3x}(1/3)$

$= 4 - (16/9)(1-e^{-3x}) - (16/9) - 8/9\, e^{-3x}$

$= 4 - (32/9) + (16/9)\, e^{-3x} - 8/9\, e^{-3x}$

$= 4 - (32/9) + (8/9)\, e^{-3x} = (36/9) - (32/9) + (8/9)\, e^{-3x}$

$= (4/9) + (8/9)\, e^{-3x}$ and this agrees with Stak p 321 B !

I am pretty amazed at making no algebra errors in these 10 or so lines. My confidence in Polyanin rises slightly.

Example 2: The cylinder source half-plane problem revisited.

Step 0: Set things up. We go back to the half plane with cylinder source problem,

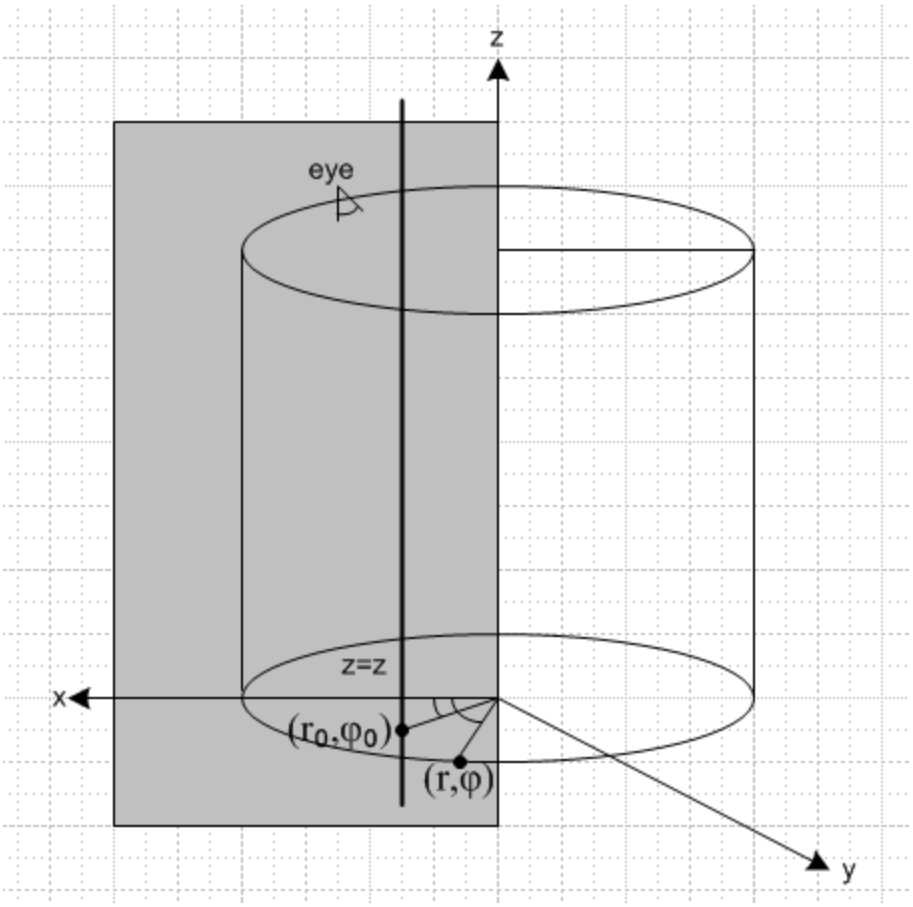

but now we rotate the source to the right so it lies in the extension of the half plane a distance a from the edge. This means that r_0= a and φ_0= π in the above picture. The source where it penetrates the xy plane does so at x = -a and y=0 so (x,y) = (-a,0) there, as he says. Our "problem" with the half plane was stated in 7.206, recall we are doing the Helmholtz problem and it is just $(-\nabla_{2D}^2-\lambda)g = \delta^{(2)}(\mathbf{r}-\mathbf{r}_0)$. If we write $\lambda = -k^2$, we get precisely 7.295 where everything including BC's is now in Cartesians.

Now we want to ponder the integral equation 7.250 (of the "integral equation method"). The "incident" wave for our problem is a 2D free space source I usually call $E_2(x,y|x_0,y_0) = E_2(x,y|-a,0)$ for our case. On the boundary σ (which is the half plane) we have y = 0, so this is $E_2(x,0|-a,0)$, and so we have the LHS of 7.250 being that of p 321 C. The integral in our 2D deal is just over the half-line for σ which is x in $(0,\infty)$ and thus we arrive at the simple RHS of p 321 C. The IE is then 7.297.

This then will be our candidate for WH analysis! It has the $(0,\infty)$ endpoints. We want to solve for I(x).

Step 1: find the constant c and d. Staring at 7.297 and comparing to 7.279 p 312 we identify:

$\mu = 0$ $\quad$ $f(x) = (1/2\pi)\, K_0[k(x+a)]$ $\quad$ $k(x) = (1/2\pi)\, K_0(k|x|)$ $\quad$ $u(x) = I(x)$

Now I am going to verify a long series of "facts", but first lets just "run" with the text. // Done, and we are now back here for details.

Derive 7.298. (322)

Start with this ODE: $(-\nabla^2-\lambda)E(x,y|x_0,y_0) = \delta(x-x_0)\,\delta(y-y_0)$

$$(-\partial_x^2-\partial_y^2-\lambda)E(x,y|x_0,y_0;\lambda) = \delta(x-x_0)\,\delta(y-y_0)$$

Do an x FT on this, using the Stak FT which is this (circa p 23)

$$\hat{f}(\omega) = \int_{-\infty}^{\infty} dx\, e^{i\omega x} f(x) \qquad f(x) = (1/2\pi) \int_{-\infty}^{\infty} d\omega\, e^{-i\omega x} f(\omega)$$

This means apply $\int_{-\infty}^{\infty} dx\, e^{i\omega x}$ to both sides

$$\int_{-\infty}^{\infty} dx\, e^{i\omega x} (-\partial_x^2-\partial_y^2-\lambda)E(x,y|x_0,y_0;\lambda) = \int_{-\infty}^{\infty} dx\, e^{i\omega x}\, \delta(x-x_0)\,\delta(y-y_0) = e^{i\omega x_0}\,\delta(y-y_0)$$

Presume we can do double parts on the LHS to get [E and $\partial_x E$ vanish at $\pm\infty$]

$$\int_{-\infty}^{\infty} dx\, e^{i\omega x} (\omega^2-\partial_y^2-\lambda)E(x,y|x_0,y_0;\lambda) = e^{i\omega x_0}\,\delta(y-y_0)$$

$$(\omega^2-\partial_y^2-\lambda) \int_{-\infty}^{\infty} dx\, e^{i\omega x} E(x,y|x_0,y_0;\lambda) = e^{i\omega x_0}\,\delta(y-y_0)$$

and sitting there is our integral of interest, call it $I(\omega,y|x_0,y_0;\lambda)$ so we have

$$(\omega^2-\partial_y^2-\lambda)\, I(\omega,y|x_0,y_0;\lambda) = e^{i\omega x_0}\,\delta(y-y_0)$$

$$(-\partial_y^2 + \mu^2)\, I(\omega,y|x_0,y_0;\lambda) = e^{i\omega x_0}\,\delta(y-y_0) \qquad \mu^2 \equiv \omega^2-\lambda \equiv -\lambda' \quad \text{as in p 53 5.113}$$

This is a 1D Helmholtz Green's Function equation with source $e^{i\omega x_0}$ instead of 1. We know the solution of this ODE from p 55 5.122 and thus we get

$$I(\omega,y|x_0,y_0;\lambda) = e^{i\omega x_0}\{e^{-\mu|y-y_0|}/2\mu\} = e^{i\omega x_0}\,\{\exp(-\sqrt{\omega^2-\lambda}\,|y-y_0|\} / 2\sqrt{\omega^2-\lambda}$$

Thus we have shown that

$$\int_{-\infty}^{\infty} dx\, e^{i\omega x} E(x,y|x_0,y_0;\lambda) = e^{i\omega x_0}\,\{\exp(-\sqrt{\omega^2-\lambda}\,|y-y_0|\} / 2\sqrt{\omega^2-\lambda}$$

From p 55 5.120 we know that [here $\lambda = -k^2$]

$$E(x,y|x_0,y_0;\lambda) = (1/2\pi)K_0(kR) \qquad R = \sqrt{(x-x_0)^2 + (y-y_0)^2}$$

so we have now shown that

$$\int_{-\infty}^{\infty} dx\, e^{i\omega x} \{(1/2\pi)K_0(k\sqrt{(x-x_0)^2 + (y-y_0)^2})\} = e^{i\omega x0} \{\exp(-\sqrt{\omega^2-\lambda}\,|y-y_0|\} / 2\sqrt{\omega^2-\lambda}$$

If we now set $x_0 = y_0 = y = 0$, we get $R = |x|$ and so

$$\int_{-\infty}^{\infty} dx\, e^{i\omega x} \{(1/2\pi)K_0(k|x|)\} = 1 / [2\sqrt{\omega^2-\lambda}\,] = 1/[2\sqrt{\omega^2+k^2}\,] \qquad \text{// which is 7.298}$$

Comment: this seems a little like Hadamard's Method of Descent. We apply FT to a 2D PDE and end up with a 1D ODE whose solution we know, so we compute the integral of a 2D function and get a 1D function. Knowing more, we obtain less. Not quite, but OK. This is in general a good exercise in using an ODE to compute an integral, something I was not really familiar with.

Resume at top of page 322.

We have now our integral equation of interest, and, comparing to 7.279, we may identify

$\mu = 0$ $\qquad f(x) = (1/2\pi)\, K_0[k(x+a)]$ $\qquad k(x) = (1/2\pi)\, K_0[k|x|]$ $\qquad u(x) = I(x)$

But something is different here. Our integral equation is this

$$\int_{0}^{\infty} d\xi \{(1/2\pi)K_0(k|x-\xi|)\}I(\xi) = \{(1/2\pi)K_0(k(x+a)\} \qquad x>0$$

If we define our $I_+(\xi)$ function in the usual way, we get

$$\int_{-\infty}^{\infty} d\xi \{(1/2\pi)K_0(k|x-\xi|)\}I_+(\xi) = \{(1/2\pi)K_0(k(x+a)\} = f(x) \qquad x>0$$

If we just consider the LHS here for $x<0$, "it must be something", and now we write that as

$$\int_{-\infty}^{\infty} d\xi \{(1/2\pi)K_0(k|x-\xi|)\}I_+(\xi) = -g_-(x) + \{(1/2\pi)K_0(k(x+a)\} \qquad x<0$$

so this defines $g_-(x)$ for $x < 0$, and we can see that $g_-(x) = 0$ for $x>0$ is consistent with the previous equation. Now here is a difference compared to our previous work. We are not going to convert f(x) into a one sided function. This is really the purposes of defining $g_-(x)$ as shown. We maintain f(x) as a "two sided function" because certain things will get simpler soon.

The large x behavior of k from Jackson p 75 is

$$k(x) \sim K_0[k|x|] \sim \sqrt{\pi/2k|x|}\, e^{-k|x|} \qquad \text{p 314 (1)} \qquad \Rightarrow \qquad c = k$$

$f(x) \sim K_0[k(x+a)] \sim \sqrt{\pi/[2k(x-a)]}\, e^{-k(x-a)} \sim e^{-kx}$ p 314 (2) => d' = -k

I have no idea how you deduce large x for I(x) which is the solution since there is no inhomo term in 7.297. We know that I is the induced "current" on our half-plane, and certainly for $x \to \infty$ we would expect it to decay to 0 just because we get infinitely far from the inducing source. Proving this might require some application of a Green's Theorem. I will skip this detail and assume $I \to 0$ and then we have

$u(x) = I(x)$ p 314 (3) => d'' = 0

Now g_- is "different" here as shown in 7.300, and I agree that we can interpret g as $u_i + u_s$ ("the total field" formerly called u, now perhaps called w from page 321). Again our intuition tells us that as we go off to infinite on the half plane, we will have $g \to 0$. But I suspect that in fact $g \to e^{-kx}$ so as in (4) we again get c = k.

Now we want to draw some arrows and determine the "strip". From page 314 we expect k^(ω) to be analytic (-k,k) and we don't know about f^(ω) yet. But we have to compute the FT's of both these things anyway to proceed with WH, and we have

k	k^(ω) in 7.298	analytic -k,k	pull cuts apart up and down to get this.
f	f̂(ω) in p 322 D	analytic -k,k	

I think this is the situation we end up

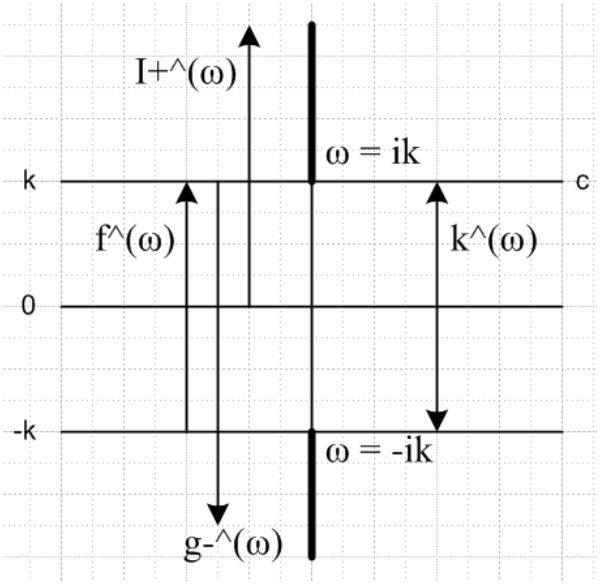

so our "strip" really lies (0,k) only.

Now go back to the integral equation:

$$\int_{-\infty}^{\infty} d\xi \, \{(1/2\pi)K_0(k|x-\xi|)\} I_+(\xi) = \{(1/2\pi)K_0(k(x+a)\} \qquad x>0$$

$$\int_{-\infty}^{\infty} d\xi \; \{(1/2\pi)K_0(k|x-\xi|)\} I_+(\xi) = -g_-(x) + \{(1/2\pi)K_0(k(x+a)\} \qquad x<0$$

We can write these now as one single equation, which is the second equation above:

$$\int_{-\infty}^{\infty} d\xi \; \{(1/2\pi)K_0(k|x-\xi|)\} I_+(\xi) = -g_-(x) + \{(1/2\pi)K_0(k(x+a)\} \qquad x \text{ in } (-\infty,\infty)$$

If we do x FT on both sides, we know the integral diagonalizes in the usual way and we get

$$\{(1/2\pi)K_0(k|x|)\}\hat{}(\omega)\; I_+\hat{}(\omega) \;=\; -\, g_-\hat{}(\omega) \;+ \{(1/2\pi)K_0(k(x+a)\}\hat{}(\omega) \qquad 0 < \mathrm{Im}(k) < 1$$

and if we insert our computed FT's, this gives 7.301 top of page 323.

Step 2: Continue processing.

So far we have our candidate FT equation 7.301 ready to try to "separate" into plus functions on one side and minus functions on the other side. Stak claims you can get this same equation by a different method based on the PDE, but I am not going to attempt this. Probably it is done that way in some other text and Stak is just acknowledging that fact.

The first problem is to "clean up" the LHS of 7.301. We do the quotient trick shown in 7.302 where we write 1/root as num/den. We see that num has branch point at $\omega = -ik$ and that cut goes down, so the num is really num_+. Similarly, the den is really den_- since its branch point is at $\omega = ik$ and goes up. So this quotient is in fact $\text{num}_+/\text{den}_-$. We want the plus on top so that in 7.310 the first term will have a product of two plus functions. Installing this and multiplying through by den_- we get 7.304. Here the first term on the LHS is a product of two plus functions. The RHS is the product of two minus functions. BUT, as he says "unfortunately", the 2nd term on LHS is a mix of plus and minus and will have to be separated! We use our sum splitting theory to do this, and I have followed the development through page 324 A. Recall that for this first term we take our "lower contour called C_1 on page 317, and we assume that ω lies above it in the strip. Our function $a(\omega) \to 0$ in all directions as $\omega^{-1/2}$. It is certainly analytic in any strip you want with bottom edge at $\omega = -ik$, so we take C_1 in the region as shown p 325, it just has to be in the strip, above the bottom of the strip, and below ω. It is the expo that causes the GC to be addable in the lower half plane and that is where contour D comes from.

Derive page 325 A from p 324 A.

This is a typical cut wrap situation. I did some details in pencil in the text, but will do it all here in detail.

$$a_+(\omega) = (1/2\pi i) \int_D d\alpha \;\; e^{-ia\alpha} / [\, (\alpha-\omega)\sqrt{\alpha+ik}\,] \;=\; (1/2\pi i) \int_D d\alpha \; f(\alpha)$$

If we regard the right part of the D contour as D_1, then we can say

$$= (1/2\pi i) \int_{D1} d\alpha \; [\, f(\alpha_R) - f(\alpha_L)\,]$$

Errata note: I need to set $\alpha = -iR$ and then $R = i\alpha$. If we put $\alpha = -5i$, then $R = i(-5i) = +5$ as desired.

Letting $\alpha = -iR$ we see that $\alpha = -ik$ corresponds to $R = i\alpha = i(-ik) = k$, and $\alpha = -i\infty$ to $R = \infty$. So we have

$$= (1/2\pi i) \int_{\mathbf{k}}^{\infty} [-idR] [f(\alpha_{\mathbf{R}}) - f(\alpha_{\mathbf{L}})] = - (1/2\pi) \int_{\mathbf{k}}^{\infty} dR[f(\alpha_{\mathbf{R}}) - f(\alpha_{\mathbf{L}})]$$

and our only task is to compute the discontinuity shown. In terms of angle θ in page 324 picture, we have

$f(\alpha_{\mathbf{R}}) = f(\text{mag} = R\text{-}k, \theta = -\pi/2)$ $\qquad$ $\alpha_{\mathbf{R}} = -iR + i\varepsilon$
$f(\alpha_{\mathbf{L}}) = f(\text{mag} = R\text{-}k, \theta = +3\pi/2)$ $\qquad$ $\alpha_{\mathbf{L}} = -iR - i\varepsilon$

We have from above

$$f(\alpha) = e^{-ia\alpha} / [(\alpha-\omega) \sqrt{\alpha+ik}]$$

The first two factors don't care about the $\pm i\varepsilon$ so we write

$$f(\alpha) = e^{-ia(-iR)} / [(-iR-\omega) \sqrt{\alpha+ik}] = i e^{-aR} / [(R-i\omega) \sqrt{\alpha+ik}]$$

Now $\alpha+ik = \alpha - (-ik)$ is a little vector connecting arbitrary point α and the point $-ik$, arrow tip on α. If α lies on the half line $\alpha = -ik$ to $\alpha = -i\omega$, then the length of this vector is $R-k$, see page 325 figure. Or just note that $|\alpha+ik| = |-iR+ik| = (R-k)$. On the right we know that the phase of this arrow will be $-\pi/2$ on the right, and on the left $+3\pi/2$, from page 324 picture (think ω plane = α plane). So

$$\sqrt{\alpha_{\mathbf{R}}+ik} = |\sqrt{\alpha+ik}| e^{-i\pi/4} = \sqrt{R-k}\ e^{-i\pi/4}$$
$$\sqrt{\alpha_{\mathbf{L}}+ik} = |\sqrt{\alpha+ik}| e^{+i3\pi/4} = \sqrt{R-k}\ e^{+i3\pi/4}$$

$$[f(\alpha_{\mathbf{R}}) - f(\alpha_{\mathbf{L}})] = i e^{-aR} / [(R-i\omega)] * \{ (1/\sqrt{R-k}\,) e^{i\pi/4} - (1/\sqrt{R-k}\,) e^{-i3\pi/4} \}$$

$$= i e^{i\pi/4} e^{-aR} / [\sqrt{R-k}\ (R-i\omega)] * \{ 1 - e^{-i4\pi/4} \} = i e^{i\pi/4} e^{-aR} / [\sqrt{R-k}\ (R-i\omega)] * \{ 1 - e^{-i\pi} \}$$

$$= 2 i e^{i\pi/4} e^{-aR} / [\sqrt{R-k}\ (R-i\omega)]$$

We can now assemble our pieces to get

$$a_{+}(\omega) = - (1/2\pi) \int_{\mathbf{k}}^{\infty} dR[f(\alpha_{\mathbf{R}}) - f(\alpha_{\mathbf{L}})]$$

$$= - (1/2\pi) \int_{\mathbf{k}}^{\infty} dR[2 i e^{i\pi/4} e^{-aR} / [\sqrt{R-k}\ (R-i\omega)]$$

$$= - (1/2\pi) 2 i e^{i\pi/4} \int_{\mathbf{k}}^{\infty} dR\ e^{-aR} / [\sqrt{R-k}\ (R-i\omega)]$$

$= (1/i\pi)\ e^{i\pi/4} \int_{k}^{\infty} dR\ e^{-aR} / [\sqrt{R-k}\ (R-i\omega)]$ $\quad\quad$ Im(ω) > -k analytic

and this agrees with p 325 A.

Compute the integral p 325 A.

Consider

$$I = \int_{k}^{\infty} dR\ e^{-aR} / [\sqrt{R-k}\ (R-i\omega)]$$

Change variable to x = R-k so dR = dx and R=k means x=0, so have

$$= \int_{0}^{\infty} dx\ e^{-a(x+k)} / [\sqrt{x}\ (x+k-i\omega)] = e^{-ak} \int_{0}^{\infty} dx\ e^{-ax} / [\sqrt{x}\ (x+b)] \qquad b = k-i\omega$$

So we want to find

$$J = \int_{0}^{\infty} dx\ e^{-ax} / [\sqrt{x}\ (x+b)] \qquad b = k-i$$

How might you "look this up" ? Well let's try $x = y^2$ and then $dx = 2ydy$ and $\sqrt{x} = y$ so we get good cancellation and have

$$J = 2 \int_{0}^{\infty} dy\ e^{-ay^2} /(y^2+b)$$

which seems pretty basic, a Gaussian type deal. The integrand is even so write as

$$J = \int_{-\infty}^{\infty} dy\ e^{-ay^2} /(y^2+b)$$

but you cannot close up or down! Let's try this

$$J = 2 \int_{0}^{\infty} dy\ e^{-ay^2} /(y^2+c^2) = 2 \int_{0}^{\infty} dy\ e^{-ay^2} /[(y-ic)(y+ic)] \qquad c^2 = b \quad c = \sqrt{k-i\omega}$$

$$= 2 \int_{0}^{\infty} dy\ e^{-ay^2} \{ - (1/2ic)* [\ 1/(y+ic) - 1/(y-ic)]$$

so now we just need this integral

$$K = \int_{0}^{\infty} dy\ e^{-ay^2} / (y+d)$$

but I can't find that either.

Start over. So now let's pay attention to the 7.54 suggestion

$$I \equiv \int_{\mathbf{k}}^{\infty} dR\, e^{-aR} / [\sqrt{R-k}\ (R-i\omega)]$$

Let -iω = p and write this as

$$I(a,p) = \int_{\mathbf{k}}^{\infty} dR\, e^{-aR} / [\sqrt{R-k}\ (R+p)]$$

$$= e^{ap} \int_{\mathbf{k}}^{\infty} dR\, e^{-a(R+p)} / [\sqrt{R-k}\ (R+p)]$$

$$= e^{ap} J(a,p) \qquad // = e^{ap} F(a) \text{ for 7.54}$$

where

$$J(a,p) = \int_{\mathbf{k}}^{\infty} dR\, e^{-a(R+p)} / [\sqrt{R-k}\ (R+p)] \qquad // \text{This is F(a) page 330}$$

Then we have

$$K = -\partial_{\mathbf{a}} J = \int_{\mathbf{k}}^{\infty} dR\, e^{-a(R+p)} / \sqrt{R-k} = e^{-ap} \int_{\mathbf{k}}^{\infty} dR\, e^{-aR} / \sqrt{R-k} = e^{-ap} L$$

and we have removed a denominator factor. So we then have to compute

$$L = \int_{\mathbf{k}}^{\infty} dx\, e^{-ax} / \sqrt{x-k}$$

Now I guess try y = x-k to get

$$L = \int_{\mathbf{0}}^{\infty} dy\, e^{-a(k+y)} / \sqrt{y} = e^{-ak} \int_{\mathbf{0}}^{\infty} dy\, e^{-ay} / \sqrt{y}$$

Now use GR7 page 346

4. $$\int_0^\infty x^{\nu-1} e^{-\mu x}\, dx = \frac{1}{\mu^\nu}\,\Gamma(\nu) \qquad [\mathrm{Re}\,\mu > 0, \quad \mathrm{Re}\,\nu > 0] \qquad \text{FI II 779}$$

with μ = a, ν = 1/2,to get

$$\int_0^\infty dy\, e^{-ay}/\sqrt{y} \;=\; a^{-1/2}\Gamma(1/2) \;=\sqrt{\pi/a}$$

So we seem then to have

$$L = e^{-ak}\sqrt{\pi/a}$$

$$-\partial_a J = \; e^{-ap}\, L \; = e^{-a(k+p)}\sqrt{\pi/a}$$

We now want to find J, so

$$-J = \int_0^a dx\, e^{-x(k+p)}\sqrt{\pi/x} \; + K$$

$$= \sqrt{\pi}\int_0^a dx\, e^{-x(k+p)}/\sqrt{x} \; + K$$

Now use

3.381

1. $$\int_0^u x^{\nu-1}e^{-\mu x}\,dx = \mu^{-\nu}\,\gamma(\nu,\mu u) \qquad [\mathrm{Re}\,\nu > 0] \qquad \text{EH I 266(22), EH II 133(1)}$$

with ν = 1/2 and μ = k+p and u = a to get

$$-J = \sqrt{\pi}\;[k+p]^{-1/2}\,\gamma(1/2,[k+p]a) \; + K \qquad \text{// incomplete gamma function}$$

Then finally

$$I(a,p) \;= -\,e^{ap}\,\{\sqrt{\pi}\;[k+p]^{-1/2}\,\gamma(1/2,[k+p]a) \; + K\}$$

4.[11] $$\gamma\left(\tfrac{1}{2},x^2\right) = \sqrt{\pi}\,\Phi(x) \qquad \text{EH II 147(1)}$$

$$I(a,p) \;= -e^{ap}\,\{\sqrt{\pi}\;[k+p]^{-1/2}\sqrt{\pi}\,\Phi(\sqrt{a(k+p)}\,) \; + K\} \qquad \text{// "the probability integral"}$$

1.[11] $$\Phi(x) = \mathrm{erf}(x) = \frac{2}{\sqrt{\pi}}\int_0^x e^{-t^2}\,dt \qquad \text{(called the error function)}$$

$$I(a,p) \;= -e^{ap}\,\{\pi\,[k+p]^{-1/2}\,\mathrm{erf}(\sqrt{a(k+p)}\,) \; + K\}$$

Now we have to worry about our constant K. Recall we had

$$I(a,p) = \int_k^\infty dR\, e^{-aR} / [\sqrt{R-k}\;\;(R+p)]$$

If we take $k \to \infty$, it seems that $I \to 0$. We then have to have

$$K = -\pi [k+p]^{-1/2}\, 1$$

=>

$$I(a,p) = -e^{ap}\ \pi\, [k+p]^{-1/2}\ \{\mathrm{erf}(\sqrt{a(k+p)}\,) - 1\}$$ erfc = 1-erf says GR7

$$= e^{ap}\ \pi\, [k+p]^{-1/2}\ \mathrm{erfc}(\sqrt{a(k+p)}\,)$$

$$= e^{ap}\, F(a)$$

which tells us that

$$F(a) = \pi\, [k+p]^{-1/2}\ \mathrm{erfc}(\sqrt{a(k+p)}\,)$$

which is pretty close to the claimed result in 7.54. My result is correct, he has a typo and it is fixed in the new edition.

Return now to $a_+(\omega)$.

Above I have shown that

$$\int_{\mathbf{k}}^{\infty} dR\, e^{-aR} / [\sqrt{R-k}\ (R+p)] = e^{ap}\, \pi\, [k+p]^{-1/2}\ \mathrm{erfc}(\sqrt{a(k+p)}\,) = I \qquad \omega = ip \qquad p = -i\omega$$

Therefore from page 325 we have

$$a_+(ip) = e^{i\pi/4}\, (i\pi)^{-1}\, e^{ap}\, \pi\, [k+p]^{-1/2}\ \mathrm{erfc}(\sqrt{a(k+p)}\,)$$

$$= -i\, e^{i\pi/4}\, e^{ap}\ [k+p]^{-1/2}\ \mathrm{erfc}(\sqrt{a(k+p)}\,)$$ // agrees with p 325 B

When we set $p = -i\omega$, we have to handle the root

$$\sqrt{p+k} = (p+k)^{1/2} = (-i\omega+k)^{1/2} = (-i)^{1/2}\, (\omega+ik)^{1/2} = e^{-i\pi/4}\ (\omega+ik)^{1/2}$$

So we then get

$$a_+(\omega) = -i\, e^{i\pi/4}\ e^{-ia\omega}\ e^{+i\pi/4}\, [\omega+ik]^{-1/2}\ \mathrm{erfc}(e^{-i\pi/4}\sqrt{a}\,\sqrt{\omega+ik}\,)$$

$$a_+(\omega) = -i\, e^{i\pi/2}\, e^{-ia\omega}\ [\omega+ik]^{-1/2}\ \mathrm{erfc}(e^{-i\pi/4}\sqrt{a}\,\sqrt{\omega+ik}\,)$$

$$a_+(\omega) = e^{-ia\omega}\ [\omega+ik]^{-1/2}\ \mathrm{erfc}(e^{-i\pi/4}\sqrt{a}\,\sqrt{\omega+ik}\,)$$

And finally after many pages of work, we arrive at p 325 D. This is the plus function part of the term shown bottom of page 323, it took Stak a full 2 pages to obtain it! He now fails to make the statement we expect to see. We want to examine this thing for large ω. From AS

7.12.1

$$\operatorname{erfc} z \sim \frac{e^{-z^2}}{\sqrt{\pi}z} \sum_{m=0}^{\infty} (-1)^m \frac{1 \cdot 3 \cdot 5 \cdots (2m-1)}{(2z^2)^m},$$

so we have

$\operatorname{erfc}(z) \sim e^{-z^2}/z$

$\operatorname{erfc}(\sqrt{c}\ \sqrt{\omega}\ ) \sim e^{-c\omega} / \sqrt{\omega}$ $\qquad \sqrt{c} = e^{-i\pi/4}\sqrt{a} \qquad c = e^{-i\pi/2}\, a = -ia$

$= e^{-(-ia)\omega} / \sqrt{\omega} \quad = e^{+ia\omega} / \sqrt{\omega}$

So then we get

$a_+(\omega) = e^{-ia\omega}\ [\omega+ik]^{-1/2} \operatorname{erfc}(e^{-i\pi/4}\sqrt{a}\ \sqrt{\omega+ik}\ )$

$\rightarrow\ e^{-ia\omega}\ 1/\sqrt{\omega}\ *\ e^{+ia\omega}\ / \sqrt{\omega}\ \sim\ 1/\omega$

and the important fact is that the problematic $e^{-ia\omega}$ factor in p 323 A LHS has been tamed !!!

We know of course now that

$a_+(\omega) = \ e^{-ia\omega} /\sqrt{\omega+ik} *\ \operatorname{erfc}(e^{-i\pi/4}\sqrt{a}\ \sqrt{\omega+ik}\ )$

$a_-(\omega)\ = e^{-ia\omega} / \sqrt{\omega+ik}\ \ -\ a_+(\omega)$

$= \ e^{-ia\omega} /\sqrt{\omega+ik}\ \ [\ 1 - \operatorname{erfc}\ ]$

$= e^{-ia\omega} /\sqrt{\omega+ik}\ \ \operatorname{erf}(e^{-i\pi/4}\sqrt{a}\ \sqrt{\omega+ik}\ )$

We now install these into our problem child 7.304 we get p 326 A, and we now have full segregation of the plus and minus functions. The strip for this thing was (0,k) as shown in 7.301, but somehow in 326 A he expands this to (-k,k), which reflects the fact that $I_+\hat{}(\omega)$ is better than we thought.

Now we have a flurry of claims about the decay of terms in p 326 A, but the bottom line is that they do the right thing so we conclude that each side is E ≡ 0 and this gives us an expression for $I_+\hat{}(\omega)$ as shown in 7.306.

Derive p 326 C.

Given B, that is to say. We know that $I_+\hat{}(\omega)$ is analytic above the line -k (that is, for Im(ω) > -k). We know that we can close down just as before due to the $e^{-i\omega a}$ factor, same as we had in our recent a(ω) and $a_+(\omega)$ discussions. So I agree that our starting point is the contour D. We mimic our work of a section above. In the first line here, however, we use ω as the integration variable instead of the α we used above:

$$I_+(x) = (1/2\pi) \int_D d\omega\, e^{-i\omega(x+a)}\, \mathrm{erfc}(e^{-i\pi/4}\sqrt{a}\,\sqrt{\omega+ik}\,) = (1/2\pi) \int_D d\omega\, f(\omega)$$

where $f(\omega) = e^{-i\omega(x+a)}\, \mathrm{erfc}(e^{-i\pi/4}\sqrt{a}\,\sqrt{\omega+ik}\,)$

If we regard the right part of the D contour as D_1, then we can say

$$= (1/2\pi) \int_{D1} d\omega\, [\, f(\omega_R) - f(\omega_L)\,]$$

Letting ω = -iR we see that ω = -ik corresponds to R = iω = i(-ik) = k, and ω = -i∞ to R = ∞. So we have

$$= (1/2\pi) \int_k^\infty [-idR]\, [\, f(\omega_R) - f(\omega_L)\,] = -(i/2\pi) \int_k^\infty dR[\, f(\omega_R) - f(\omega_L)\,]$$

and our only task is to compute the discontinuity shown. In terms of angle θ in page 324 picture, we have

$f(\omega_R) = f(\mathrm{mag} = R-k, \theta=-\pi/2)$ $\qquad$ $\omega_R = -iR+i\varepsilon$
$f(\omega_L) = f(\mathrm{mag} = R-k, \theta=+3\pi/2)$ $\qquad$ $\omega_L = -iR-i\varepsilon$

We have from above

$$f(\omega) = e^{-i\omega(x+a)}\, \mathrm{erfc}(e^{-i\pi/4}\sqrt{a}\,\sqrt{\omega+ik}\,)$$

The only factor that "sees" the distinction between ω_R and ω_L is $\sqrt{\omega+ik}$ and using our α argument above

$$\sqrt{\omega_R+ik} = |\sqrt{\omega+ik}\,|\, e^{-i\pi/4} = \sqrt{R-k}\; e^{-i\pi/4}$$
$$\sqrt{\omega_L+ik} = |\sqrt{\omega+ik}\,|\, e^{+i3\pi/4} = \sqrt{R-k}\; e^{+i3\pi/4}$$

Therefore have

$$f(\omega_R) - f(\omega_L) = e^{-i\omega(x+a)} \{\, \mathrm{erfc}(e^{-i\pi/4}\sqrt{a}\,\sqrt{R-k}\; e^{-i\pi/4}) - \mathrm{erfc}(e^{-i\pi/4}\sqrt{a}\,\sqrt{R-k}\; e^{+i3\pi/4})\,\}$$

$$= e^{-i\omega(x+a)} \{\, \mathrm{erfc}(e^{-i\pi/2}\sqrt{a}\,\sqrt{R-k}\,) - \mathrm{erfc}(e^{+i\pi/2}\sqrt{a}\,\sqrt{R-k}\,)\,\}$$

$$= e^{-i\omega(x+a)} \{\, \mathrm{erfc}(-i\sqrt{a}\,\sqrt{R-k}\,) - \mathrm{erfc}(i\sqrt{a}\,\sqrt{R-k}\,)\,\}$$

$$= e^{-i\omega(x+a)} \{\, \mathrm{erf}(i\sqrt{a}\,\sqrt{R-k}\,) - \mathrm{erf}(-i\sqrt{a}\,\sqrt{R-k}\,)\,\} \qquad \mathrm{erfc} = 1-\mathrm{erf}$$

Unlike the previous case, we are now staring at a special function, and we need to learn how to compute

$g(a) = \mathrm{erf}(ia) - \mathrm{erf}(-ia)$ $\quad a > 0$

We have this definition

$$\mathrm{erf}\, z = \frac{2}{\sqrt{\pi}} \int_0^z e^{-t^2}\, dt,$$

So we can write

$$g(a) = \mathrm{erf}(ia) - \mathrm{erf}(-ia) = (2/\sqrt{\pi})\{ \int_0^{ia} dt\, e^{-t^2} - \int_0^{-ia} dt\, e^{-t^2} \}$$

$$= (2/\sqrt{\pi})\{ \int_0^{ia} dt\, e^{-at^2} + \int_{-ia}^{0} dt\, e^{-t^2} \} = (2/\sqrt{\pi}) \int_{-ia}^{ia} dt\, e^{-t^2}$$

Therefore

$$f(\omega_R) - f(\omega_L) = e^{-i\omega(x+a)} \{ \mathrm{erf}(i\sqrt{a}\sqrt{R-k}) - \mathrm{erf}(-i\sqrt{a}\sqrt{R-k}) \}$$

$$= e^{-i\omega(x+a)} (2/\sqrt{\pi}) \int_{-ib}^{ib} dt\, e^{-t^2} \qquad \text{where } b = \sqrt{a}\sqrt{R-k}$$

Let's leave this as is for the moment. Then we have

$$I_+(x) = -(i/2\pi) \int_k^\infty dR[\, f(\omega_R) - f(\omega_L)\,]$$

$$= -(i/2\pi) \int_k^\infty dR[e^{-i\omega(x+a)} (2/\sqrt{\pi}) \int_{-ib}^{ib} dt\, e^{-t^2}\,] \qquad \omega = -iR$$

$$= -(i/2\pi)(2/\sqrt{\pi}) \int_k^\infty dR e^{-R(x+a)} \int_{-ib}^{ib} dt\, e^{-t^2} \qquad b = \sqrt{a}\sqrt{R-k}$$

$$= -i\,\pi^{-3/2} \int_k^\infty dR\, e^{-R(x+a)} \int_{-ib}^{ib} dt\, e^{-t^2} \qquad b = \sqrt{a}\sqrt{R-k}$$

But this does not agree with p 326 C. Has Stak changed this in new edition? No. Ah, but he has changed his meaning of R! So lets define S = R-k so that dS froms 0,∞. Then the above becomes

$$= -i\,\pi^{-3/2} \int_{0k}^\infty dS\, e^{-(S+k)(x+a)} \int_{-ib}^{ib} dt\, e^{-t^2} \qquad b = \sqrt{a}\sqrt{S}$$

$$= -i\,\pi^{-3/2}\,e^{-k(x+a)}\int_0^{\infty} dS\,e^{-S(x+a)}\int_{-ib}^{ib} dt\,e^{-t^2} \qquad b=\sqrt{a}\sqrt{S} \qquad \text{// change back to R}$$

$$= -i\,\pi^{-3/2}\,e^{-k(x+a)}\int_0^{\infty} dR\,e^{-R(x+a)}\int_{-ib}^{ib} dz\,e^{-z^2} \qquad b=\sqrt{aR}$$

and this then agrees with p 326 C.

Derive p 326 (7.307).

We are now instructed to set $z = i\nu$ so that [$z = ib$ becomes $\nu = b$]

$$\int_{-ib}^{ib} dz\,e^{-z^2} = i\int_{-b}^{b} d\nu\,e^{\nu^2} \qquad b=\sqrt{aR}$$

so we then have

$$I_+(x) = \pi^{-3/2}\,e^{-k(x+a)}\int_0^{\infty} dR\,e^{-R(x+a)}\int_{-b}^{b} d\nu\,e^{\nu^2} \qquad b=\sqrt{aR}$$

$$= 2\,\pi^{-3/2}\,e^{-k(x+a)}\int_0^{\infty} dR\,e^{-R(x+a)}\int_0^{b} d\nu\,e^{\nu^2}$$

Now we would like to get R out of the integration limit, so try $u = \nu/b$ and $bdu = d\nu$ and limit = 1 and we then have , since $\nu^2 = b^2u^2 = aRu^2$,

$$= 2\,\pi^{-3/2}\,e^{-k(x+a)}\int_0^{\infty} dR\,e^{-R(x+a)}\int_0^{1} [\sqrt{aR}\;du]\,e^{aRu^2}$$

$$= 2\,\pi^{-3/2}\,e^{-k(x+a)}\int_0^{\infty} dR\,e^{-R(x+a)}\sqrt{aR}\int_0^{1} du\,e^{aRu^2}$$

$$= 2\sqrt{a}\,\pi^{-3/2}\,e^{-k(x+a)}\int_0^{\infty} dR\,e^{-R(x+a)}\sqrt{R}\int_0^{1} du\,e^{aRu^2}$$

$$= 2\sqrt{a}\,\pi^{-3/2}\,e^{-k(x+a)}\int_0^{1} du\;\{\int_0^{\infty} dR\,e^{-R(x+a)}\sqrt{R}\;e^{aRu^2}\}$$

where as advised we change integration order. Continuing

$$= 2\sqrt{a}\,\pi^{-3/2}\,e^{-k(x+a)}\int_0^{1} du\;\{\int_0^{\infty} dR\sqrt{R}\;e^{aRu^2-R(x+a)}\}$$

$$= 2\sqrt{a}\,\pi^{-3/2}\,e^{-k(x+a)}\int_0^{1} du\;\{\int_0^{\infty} dR\sqrt{R}\;e^{R[au^2-(x+a)]}\}$$

$$= 2\sqrt{a}\,\pi^{-3/2}\,e^{-k(x+a)}\int_0^1 du\ \{\ \int_0^\infty dR\,\sqrt{R}\ e^{-Rd}\ \} \qquad d = x + a(1-u^2) > 0\ !$$

The R integral looks like a standard form. Maple tells us the integral is $(1/2)\,\pi^{1/2}\,d^{-3/2}$ so

$$\int_0^\infty dR\,\sqrt{R}\ e^{-Rd} = (1/2)\,\pi^{1/2}\,[x + a(1-u^2)]^{-3/2}$$

and then we are left with

$$= 2\sqrt{a}\,\pi^{-3/2}\,e^{-k(x+a)}\int_0^1 du\ \{(1/2)\,\pi^{1/2}\,[x + a(1-u^2)]^{-3/2}\}$$

$$= 2(1/2)\,\pi^{1/2}\sqrt{a}\,\pi^{-3/2}\,e^{-k(x+a)}\int_0^1 du\ \{\,[x + a(1-u^2)]^{-3/2}\}$$

$$= \sqrt{a}\,\pi^{-1}\,e^{-k(x+a)}\int_0^1 du\ \{\,[x + a(1-u^2)]^{-3/2}\}$$

Again Maple can do the integral and tells us that

$$\int_0^1 du\ \{\,[x + a(1-u^2)]^{-3/2}\} = 1/[\,\sqrt{x}\,(x+a)]$$

so we then have

$I_+(x) = \sqrt{a}\,\pi^{-1}\,e^{-k(x+a)}\ 1/[\,\sqrt{x}\,(x+a)]$ // agrees with RHS of 7.307

Now suppose instead we did the u integration first. Go back to

$$= 2\,\pi^{-3/2}\,e^{-k(x+a)}\int_0^\infty dR\,e^{-R(x+a)}\,\sqrt{aR}\int_0^1 du\,e^{aRu^2}$$

But this u integration gives a result involving the erf.

Well, I think this is what Stak did. Go back to

$$I_+(x) = 2\,\pi^{-3/2}\,e^{-k(x+a)}\int_0^\infty dR\,e^{-R(x+a)}\int_0^b dv\,e^{v^2} \qquad b = \sqrt{aR}$$

If you draw a picture, you can claim that [usual area reordering gizmo]

$$\int_0^\infty dR\int_0^b dv = \int_0^\infty dv\int_{v^2/a}^\infty dR$$

so we would then have

$$I_+(x) = 2\pi^{-3/2} e^{-k(x+a)} \int_0^\infty d\nu \int_{\nu^2/a}^\infty dR\, e^{-R(x+a)} e^{\nu^2}$$

$$= 2\pi^{-3/2} e^{-k(x+a)} \int_0^\infty d\nu\, e^{\nu^2} \int_{\nu^2/a}^\infty dR\, e^{-R(x+a)}$$

Maple gives us the integral on the right (dR integral)

$$\int_{\nu^2/a}^\infty dR\, e^{-R(x+a)} = e^{-(x+a)\nu^2/a} / (x+a)$$

so then we have

$$I_+(x) = 2\pi^{-3/2} e^{-k(x+a)} \int_0^\infty d\nu\, e^{\nu^2} e^{-(x+a)\nu^2/a} / (x+a)\}$$

$$= 2\pi^{-3/2} e^{-k(x+a)} (x+a)^{-1} \int_0^\infty d\nu\, e^{\nu^2} e^{-(x+a)\nu^2/a}$$

$$= 2\pi^{-3/2} e^{-k(x+a)} (x+a)^{-1} \int_0^\infty d\nu\, e^{-\nu^2(x/a)}$$

and this agrees with the central form shown in 7.307, so I have done it two different ways.

SO: we have now finished Chapter 7, I thought I would never get there!

Review of what we did: We considered the half-plane Helmholtz problem with a cylindrical source in the plane of the half-plane, but distance a away from it. This is the 2D problem of a point source distance a away from a half line. Using the "integral equation method", we were able to write an integral equation for the induced source density I(x) on the half plane or half wire. That integral equation was (7.297) and involves two appearances of the K_0 function which of course is E_2 apart from a constant.

So our Weiner-Hopf problem was to solve this integral equation. The source density integral running over the wire goes from $\xi = 0..\infty$ so we have the proper $(0,\infty)$ endpoints which is where WH applies. We then carry out the WH program on this integral equation, which requires a bit of heavy lifting. We have to battle in order to segregate the plus functions from the minus functions in the "diagonalized" ω space equation. But we carry this program out with all details, and we find the solution to our integral equation which is that

$$I(x) = \sqrt{a}\,\pi^{-1} e^{-k(x+a)}\, 1/[\sqrt{x}\,(x+a)] \qquad \text{on the wire or half plane, valid for } x > 0$$

We see that this induced "current" decays as e^{-kx}, where $\lambda = -k^2$ is the Helmholtz constant. If we were doing electrostatics, we would have $k = 0$ and I guess that gives us the Green's function for a point charge off the end of a half wire!

The crucial thing for WH is that you extend your solution function to $x < 0$ making it be zero there, and then you have an integral that diagonalizes under the FT because you have the T(1) group measure and endpoints. I can imagine using a version of WH with other groups. Certainly a problem in which an angle only ranges $0..\pi$ could be attempted. Maybe other groups as well, but that is a big chunk to chew and I won't even think about it right now.

Final Exam Part II: (four WH related problems)

Exercise 7.54 (p 330, read only) Compute the integral shown p 325 B.

The problem here is to do a certain integral. The result of the integral was used in the main line text on p 325 B. It is one of the sum-splitting integrals in **WH** Example 2.

Exercise 7.55 (p 330, read only) Convert the Example 1 integral equation to ODE and solve.

Another way to find the solution.

Exercise 7.56 (p 330, read only) Half line with plane wave from above, use WH method.

A Weiner-Hopf problem. Stak's Example 2 used a point source off the left end of a half line. Here we use a different source: a plane wave flowing perpendicular to the half line. Our task is again to compute the current on the half-line, and results are given.

Exercise 7.57 (p 331, read only) Solve a certain 2D Helmholtz problem using the WH method.

Another **Weiner-Hopf** problem. We are given a Helmholtz problem for the upper half x-y plane. The BC's are that $\partial_{\mathbf{n}}u = 0$ for the negative x axis, but $u = e^{-\varepsilon x}$ for the positive x axis. No physical motivation is provided for this problem, nor is the solution stated.