Charged bowl in toroidals 1_11 PhL 1.21.11

12.31.15. Just more good developmental history of bowl doc!

My previous attempt here is "charged bowl in toroidals (INCOMPLETE).doc". That doc must be retained because it contains certain technical items which are used below in this doc. Two examples are a description of the toroidal coordinate ranges, and the Mehler-Fock transform. I will refer to this simply as the INCOMPLETE doc.

Here I plan to start over on this problem. I now know that Lebedev's problem 503 has a metal lid on the bowl, so it is really a two-bowl problem. I also have a Hu pdf web claim for the potential for the general two-bowl problem, and I should be able to take a limit to get the one bowl problem result.

Everything finally comes out right in this doc (thru Section 8). This is "the breakthrough document" in my pursuit of the toroidal bowl potential. See Overview!

Overview (3 pages, written 2.2.11).....1

1. Selecting the atomic form for external problems involving localized bowls.....4

2. Comparison with the charged ellipsoid problem. 5

3. Using the Mehler Transform to find coefficients, given boundary conditions. 6

4. The coordinate range for u for the single-bowl problem.....7

5. The charged bowl problem and two interesting integrals. 8

6. The double bowl problem. 12

7. Summary of Results: 20

(a) The Charged Bowl Problem 20

(b) The Double Bowl Problem.....20

(c) Double Bowl Problem expressed in Hu/Deegan notation 21

(c) Bowl with a flat lid (Lebedev 503).....21

(d) The symmetric double bowl case (double sessile drop).....22

8. Repair of Boeing integral. 23

9. Evaluate the single-bowl integral using correct Boeing integral 24

10. Take the large r limit of this result 26

11. Did I do the large r limit wrong? 28

12. How does the single-bowl approach a sphere, taking $u_0 \rightarrow 0$? 30

13. How does the single-bowl approach a sphere, taking $u_0 = \varepsilon$ = small but finite. 30

Overview (3 pages, written 2.2.11).

In **Section 1** I give a solid explanation of what the **Smythian form** must be for the charged bowl problem.

In **Section 2** I show why **R-separation** for toroidals implies that we don't get a simple solution for this problem as we do for the charged ellipsoid.

In **Section 3** I quote the Mehler-Fock transform, and then I use it to get equations for the Smythian form coefficient functions A(τ) and B(τ). I argue correctly that the large-r BC has already been "used up" when we selected only the P function in our form, and I am wondering how our *single* BC V = V_0 at u=u_0 is going to let us solve for *two* coefficients! I realize that if we had two bowls V = V_0 at u = u_0 and V = V_2 at u = u_2, then we would have two equations for A and B. But the single bowl is still a mystery.

In **Section 4** I show my famous **bowl picture** for the first time, with range display, and I suddenly realize that the two conditions will be V = V_0 on **both sides of the single bowl**, u = u_0 and u = u_0 + 2π. As I say there, the sun is starting to shine.

In **Section 5** I then apply these two BC's to the single bowl, and then with two equations in the two unknowns A and B, I can figure out these coefficients. This requires a certain projection integral which I quote and have done elsewhere. I then solve this Cramer's Rule equation pair and find that

$$A(\tau) = \quad V_0 \sqrt{2}\, \mathrm{ch}[(\pi - u_0)\tau]\, \mathrm{ch}[(\pi + u_0)\tau] \,/\, \mathrm{ch}^2(\pi\tau)$$
$$B(\tau) = -\, V_0 \sqrt{2}\, \mathrm{ch}[(\pi - u_0)\tau]\, \mathrm{sh}[(\pi + u_0)\tau] \,/\, \mathrm{ch}^2(\pi\tau)$$

I then install these into the Smythian form, combine terms, and out comes what proves to be the correct answer for **the single charged bowl** (though I have still not seen it directly quoted anywhere!)

$$V(\xi,u) = V_0 \sqrt{2}\ \sqrt{\mathrm{ch}\xi - \cos u}\ \int_0^\infty d\tau\, P_{i\tau - 1/2}(\mathrm{ch}\xi)\, \mathrm{ch}[(\pi - u_0)\tau]\, \mathrm{ch}[(\pi + u_0 - u)\tau] \,/\, \mathrm{ch}^2(\pi\tau)$$

I immediately verify that this meets both BC's. This requires doing a certain integral which appears in the Boeing doc (and I later derived), and both BC's are 100% confirmed. More sun! Also this serves to confirm that Mehler integral. I then summarize the result above and quote the two integrals. I point out that the integral above converges for u everywhere in its range u in u_0 to u_0+ 2π. Still more sun.

In **Section 6** I attack **the two-bowl exterior problem**. This means the two bowls are u_0 and u_2 in the same toroidal system and might form things like a 3D lune or sessile drop etc. In theory the two bowls could be at different constant potentials to make a fancy capacitor, but I only deal with both at the same potential. I then solve again for A and B. This is a bit harder this time, but I get the result (after doing a certain technical fix because the first time I forgot to use u_2 + 2π instead of u_2 and I did not want to redo all the algebra, just correct it at the end). Here then is the two-bowl result I got (I quote this from lower down)

$$V(\xi,u) = V_0 \sqrt{2}\, \sqrt{\mathrm{ch}\xi - \cos u}\ \int_0^\infty d\tau\, P_{i\tau - 1/2}(\mathrm{ch}\xi)\ *$$ // double-bowl

$$\{\, \mathrm{ch}[(\pi - u_0)\tau]\mathrm{sh}[(u - u_2)\tau] \ +\ \mathrm{ch}[(\pi - u_2)\tau]\, \mathrm{sh}[(2\pi + u_0 - u)\tau] \,\} \,/\, \{\mathrm{ch}(\pi\tau)\, \mathrm{sh}[(2\pi + u_0 - u_2)\tau]\,\}$$

I note that it is not symmetric under $u_0 \leftrightarrow u_2$ since the object is not in general symmetric. I then take the limit $u_2 \rightarrow u_0$ so that my two-bowl object becomes the single bowl, and the result I get agrees with the single bowl result quoted above. I go on to realize how the Hu sessile drop paper is applying this 2-bowl result to its evaporation problem, which involves

$u_0 = \beta_1 = \pi - \theta$ $\qquad$ $u_2 = \beta_2 = \pi + \theta$ $\qquad$ θ = the contact angle

In **Section 7** I give a large **summary** of results, including further development. I quote the single (a) and double (b) bowl results, and I then show that my double bowl agrees exactly with the **Hu/Deegan form**. This is the first time I have external verification of any of this stuff! Then in (c) I **knock off the Lebedev problem 503** which is just a double-bowl problem where one of the bowls is a flat lid. My result is in perfect agreement with Lebedev. The sun is now just blindingly bright. Then in (d) I do another double-bowl special case which is the symmetrized **sessile drop**, and my result matches a result in the Hu paper.

In **Section 8** I realize that I might actually be able to DO the single-bowl $d\tau$ integral. I find what is needed in the **Boeing** doc, but I find tiny errors in those integrals and fix them (one of them) here.

In **Section 9** <u>for the first time I try to compute the single-bowl $d\tau$ integral.</u> At this point I am using the corrected Boeing page 20 #6 $\tan^{-1}$ form which has two terms,

$$\int_0^\infty d\tau\, P_{i\tau-1/2}(y)\cosh[a\tau]\,\mathrm{sech}^2(\pi\tau)$$

$$= 2^{-1/2}/\sqrt{y-\cos a} \; - \sqrt{2}\;\pi^{-1}/\sqrt{y-\cos a} \; * \tan^{-1}\left[\sqrt{1+\cos a}/\sqrt{y-\cos a}\;\right]$$

My evaluation has two $\cosh[a\tau]$ integrals to do, so "a" takes two values, and we end up with four terms which I refer to as T1,T2,T3,T4. Since this work is entirely redone in a later doc, I won't worry too much about fine details. I do find that somehow my "evaluated form" with these 4 terms does not meet the BC at $u = u_0$. This is a first sign of trouble, as noted there in red. A cloud appears.

[In retrospect, the problem is going to be this: the above integral you would think was valid for $|a|<2\pi$, but as written it is only valid for $|a| < \pi$ (even including my later phase "adjustment"). But the two "a" values need the full range, so an error is introduced right at this early step.]

In **Section 10** I try to do the large-r limit to see if my evaluated form gives V = Q/r and to see if it predicts the correct bowl capacitance. I do get a Q/r form, but the **capacitance is totally wrong**! I get $C = (R/\pi)u_0$ but the right answer is $C = (R/\pi)(\pi - u_0 + \sin u_0)$. More clouds are forming in the sky. This is now the beginning of a pretty long saga that won't be resolved until three docs in the future! But I continue here.

In **Section 11** I rethink the $r \rightarrow \infty$ limit, but discover nothing new.

In **Section 12** I realize that maybe I can find my C error by looking at the **full-sphere bowl limit** which means $u_0 = 0$. But I find from my original single-bowl integral form that $V(\xi,u)=V_0$ in this limit instead of the expected $V=V_0(R/r)$! I thought maybe I was accidentally doing the interior problem instead of the exterior one. Only much later (3 docs in future) could I explain this mystery! It's the Big Bang!

In **Section 13** I try to approach the limit $u_0 = 0$ in a more delicate fashion, setting $u_0 = \varepsilon > 0$. I do lots of algebra here, tons of small ε expansions, but conclude at the end it is all garbage. In the last comment I just ponder what happens to our continuous external potential problem (which includes the inside and outside of the bowl) when you pinch off the hole in the bowl as you do this limit $u_0 \to 0$.

At this point I know something is wrong, and I dive into the first of my three "capacitance" docs in a search to find the answer. This will take perhaps three whole days to resolve!

---

1. Selecting the atomic form for external problems involving localized bowls.

Here are some choices for toroidal atomic forms where azimuth is oscillatory

ξ in $(0,\infty)$ u in $(0,2\pi)$ φ in $(0,2\pi)$

		expo	osc	osc
(1)	$\sqrt{ch\xi - cosu}$	$[P_{n-1/2}^{m}(ch\xi), Q_{n-1/2}^{m}(ch\xi)]$	$[\sin(nu),\cos(nu)]$	$[\sin(m\varphi),\cos(m\varphi)]$

		osc	expo	osc
(2)	$\sqrt{ch\xi - cosu}$	$[P_{i\tau-1/2}^{m}(ch\xi), Q_{i\tau-1/2}^{m}(ch\xi)]$	$[\exp(\tau u), \exp(-\tau u)]$	$[\sin(m\varphi),\cos(m\varphi)]$

Our first question is: "which form should we use and why? " Our surface of interest is a bowl and on a bowl, the coordinates which describe a point are ξ and φ, since u labels the bowl. If we want to do a Dirichlet problem on a bowl, then we want ξ and φ to be the oscillator coordinates so we can have a complete set in which to match some prescribed f(ξ,φ) potential on the bowl, and that means form (2). As we move off our reference bowl to other math bowls, u varies, and it is the "radial" or expo coordinate.

Next, we may quote a few equations relating toroidal to Cartesian coordinates: First

$$th\xi = 2a\rho / (a^2+r^2)$$
$$\tan(u) = 2az/(r^2-a^2)$$

If r is large, these become

$$th\xi = 2a\rho / r^2 = 2(\rho/r)(a/r) \le 2(a/r)$$
$$\tan(u) = 2az/r^2 = 2(z/r)(a/r) \le 2(a/r)$$

Therefore, for very large r in any direction, we know that we have $\xi \to 0$ and $u \to 0$ (or 2π). So we must associate "distance regions of space" away from our charged bowl as being regions in which BOTH ξ and u have certain values. Small ξ label huge tori which hug the central axis as they start out, and small u label bowls which are close to the iris as they start out.

Now look at the inverse coordinate situation

$\rho = a\,sh\xi/(ch\xi - cosu)$ $\quad\quad$ $\rho > 0$ $\quad\quad$ $sign(\rho) = sign(\mu)$

$z = a\,sinu/(ch\xi - cosu)$ $\quad\quad$ $z > 0$ $\quad\quad$ $sign(z) = sign(sin(\eta))$

You can see that small ξ causes small ρ for fixed $u \neq 0$, but not necessarily small z. (first equation)
You can see that small u causes small z for fixed $u \neq 0$, but not necessarily small ρ. (second equation)

This reinforces the idea that you need BOTH ξ and u to be small (or u near 2π) to be talking large r. This situation is different from that encountered in ellipsoidals, say, where there large ellipsoid label assures large r. Similarly of course in the special case of sphericals or spheroidals. Since, for large r, we know that ξ must be small, we may eliminate the Q function from our selected atomic form and narrow things down to this atomic form

$$\text{(2)} \qquad \underset{\text{osc}}{\sqrt{ch\xi - cosu}}\ \underset{\text{osc}}{[P_{i\tau-1/2}^{m}(ch\xi)]}\ \underset{\text{expo}}{[\exp(\tau u), \exp(-\tau u)]}\ \underset{\text{osc}}{[\sin(m\varphi), \cos(m\varphi)]}$$

For azisym situations, to which we now specialize, this becomes

$$\underset{\xi \text{ in } (0,\infty)}{\underset{\text{osc}}{\sqrt{ch\xi - cosu}}\ \underset{\text{osc}}{[P_{i\tau-1/2}(ch\xi)]}}\ \underset{u \text{ in } (0,2\pi)}{\underset{\text{expo}}{[\exp(\tau u), \exp(-\tau u)]}}$$

$$\text{(2)}$$

So we have successfully narrowed down our form. The parameter τ is not quantized and we regard it as taking values τ in $(0,\infty)$ since the negative range repeats the positive range.

2. Comparison with the charged ellipsoid problem.

We know that the ellipsoidal harmonics have the form $E_{n,p}(\rho)\ E_{n,p}(\mu)\ E_{n,p}(\nu)$ in the three coordinates, where E are Lamé functions, and I use Hobson notation. Each E could be replaced with a second kind F function. This is the atomic form where n and p are discrete indices, n being an integer. For the charged ellipsoid, the solution is simply $F_{0,0}(\rho)\ E_{0,0}(\mu)\ E_{0,0}(\nu) = F_{0,0}(\rho)$ = the simple Kelvin solution, where ρ is the radial coordinate which labels ellipsoids.

Now how might this be compared to the toroidal situation? Because toroidals are only R-separable, we have that (non factorizable) external factor $\sqrt{ch\xi - cosu}$ out front, as shown above. If we are looking then for the potential of a charged bowl, we need a solution for which, for $u=u_0$ (the charged metal bowl label), the potential is independent of the other coordinate ξ which labels a circle on the bowl. The toroidal form is different from the ellipsoidal case because we cannot find some τ for which the product $\sqrt{ch\xi - cosu_0}\ P_{i\tau-1/2}(ch\xi)$ is independent of ξ. We know that since we know $P_{i\tau-1/2}(ch\xi) \neq F(u_0)/\sqrt{ch\xi - cosu_0}$. The P function simply does not have that form for any choice of τ. Our best hope would be $\tau = 0$, but A&S show that $P_{-1/2}(ch\xi) = [\ (\pi/2)ch(\xi/2)]^{-1}K(th(\xi/2)$ the where K is the complete elliptic integral. So the upshot here is that the charged bowl potential is not just a simple function as it is in the ellipsoidal case, but it will be an integral of the following form

$$V(\xi,u) = \sqrt{ch\xi - cosu}\ \int_0^\infty d\tau\ P_{i\tau-1/2}(ch\xi)[\ A(\tau)ch[(u-2\pi)\tau] + B(\tau)sh[(u-2\pi)\tau]\ ] \qquad \text{// hypothetical}$$

where now I have change the u atoms from expos to hyperbolics with no loss of generality. So there will exist some A and B functions which make this potential be that for the charged bowl! Our job (as usual) is to find these coefficient functions.

In the above, there are many ways to write the square bracket, I have picked one to make the following point. Even if you pick the form shown above, you cannot claim that $A(\tau) = 0$. If you do make that claim, then you find that $V(\xi,u) \propto sh(u-2\pi)$ and then when u lies on the iris, you will get $V(\xi,u)= 0$, but we know that cannot be true for the entire close region of the iris. Thus, we really are going to be stuck with both coefficient functions A and B. The same is true using $[\ A(\tau)ch(u\tau) + B(\tau)sh(u\tau)\ ]$ if you think of the iris now as $u = 0$. [This was the mistake I made in the previous doc.]

3. Using the Mehler Transform to find coefficients, given boundary conditions.

As noted that the ξ coordinate is oscillatory, and thus there is a Sturm-Liouville problem there and a complete set of functions and a transform and all that stuff. Here is the transform: { this is correctly stated, see "doing Mehler transform integrals.doc". }

$$G(\tau) = \int_0^\infty d\xi\ sh(\xi)\ P_{i\tau-1/2}(ch\xi)\ g(\xi) \qquad \text{// projection} \qquad (3.1)$$

$$g(\xi) = \int_0^\infty d\tau\ \tau\ th(\pi\tau)\ P_{i\tau-1/2}(ch\xi)\ G(\tau) \qquad \text{// expansion} \qquad (3.2)$$

I will assume now this form for the potential of the charged bowl

$$V(\xi,u) = \sqrt{ch\xi - cosu}\ \int_0^\infty d\tau\ P_{i\tau-1/2}(ch\xi)[\ A(\tau)ch(u\tau) + B(\tau)sh(u\tau)\ ] \qquad (3.3)$$

Our Dirichlet condition for the charged bowl of label u_0 is simply this

$$V_0 = \sqrt{ch\xi - cosu_0}\ \int_0^\infty d\tau\ P_{i\tau-1/2}(ch\xi)[\ A(\tau)ch(u_0\tau\ ) + B(\tau)sh(u_0\tau)\ ] \qquad (3.4)$$

I cannot justify this claim properly, but my gut feeling is that we have already "used up" the requirement that the potential $\to 0$ as $r\to\infty$ by the fact that we threw out the Q function. Assuming this is correct, our problem now is that we have only one boundary condition, but we have two unknown functions A and B, and I wonder how this is going to work out when we to the Mehler-Fock transform above.

Let's rewrite our BC (3.4) as follows, where we will be identifying $g(\xi) = V_0 / \sqrt{ch\xi - cosu_0}$,

$$(V_0 / \sqrt{ch\xi - cosu_0}\ ) = \int_0^\infty d\tau\ P_{i\tau-1/2}(ch\xi)[\ A(\tau)ch(u_0\tau) + B(\tau)sh(u_0\tau)\ ]$$

$$= \int_0^\infty d\tau\ \tau\ th(\pi\tau)P_{i\tau-1/2}(ch\xi)\ \{\ [\ A(\tau)ch(u_0\tau) + B(\tau)sh(u_0\tau)\ ]/[\ \tau\ th(\pi\tau)]\ \}$$

which now has the form of (3.2), We may then read off the inversion from (3.1) to get

$$\{ [A(\tau)ch(u_0\tau) + B(\tau)sh(u_0\tau)]/[\tau\, th(\pi\tau)] \} = \int_0^\infty d\xi\, sh(\xi)\, P_{i\tau-1/2}(ch\xi)\, (V_0 / \sqrt{ch\xi - cosu_0}\,)$$

$$[A(\tau)ch(u_0\tau) + B(\tau)sh(u_0\tau)] = V_0\, \tau\, th(\pi\tau) \int_0^\infty d\xi\, sh(\xi)\, P_{i\tau-1/2}(ch\xi)/ \sqrt{ch\xi - cosu_0}$$

And yes, we do seem to have an issue now in that we seem to have one equation from which we have to somehow determine our two coefficient functions.

Before continuing, suppose our surface were that bounded by *two* bowls perhaps they are relatively close together. Let's call these bowls u_0 (the one we started with), and u_2 = some new bowl (I skip $u_1$for no good reason). Then we would have these two boundary conditions (assuming our two-bowl metal object is all at the same potential V_0. We could do a capacitor with different potentials, but hold off on that.).

$$[A(\tau)ch(u_0\tau) + B(\tau)sh(u_0\tau)] = V_0\, \tau\, th(\pi\tau) \int_0^\infty d\xi\, sh(\xi)\, P_{i\tau-1/2}(ch\xi)/ \sqrt{ch\xi - cosu_0} \quad \text{// wrong}$$

$$[A(\tau)ch(u_2\tau) + B(\tau)sh(u_2\tau)] = V_2\, \tau\, th(\pi\tau) \int_0^\infty d\xi\, sh(\xi)\, P_{i\tau-1/2}(ch\xi)/ \sqrt{ch\xi - cosu_2}$$

At least in this case we are a little happier since we have two BC's to determine our two functions.

At this point, we have to dig a little deeper into the coordinates to see what is going on here!

NOTE: The first equation above is wrong for this reason: We need to apply our boundary conditions to both *outer* surfaces of our two-bowl object if we are talking about the "external problem". We shall fix this below.

4. The coordinate range for u for the single-bowl problem.

First we think about the single bowl situation and draw this picture, where we show the upper bowl with bowl label u_0, and from toroidal.doc we know that u_0 is the outside lip angle as shown.

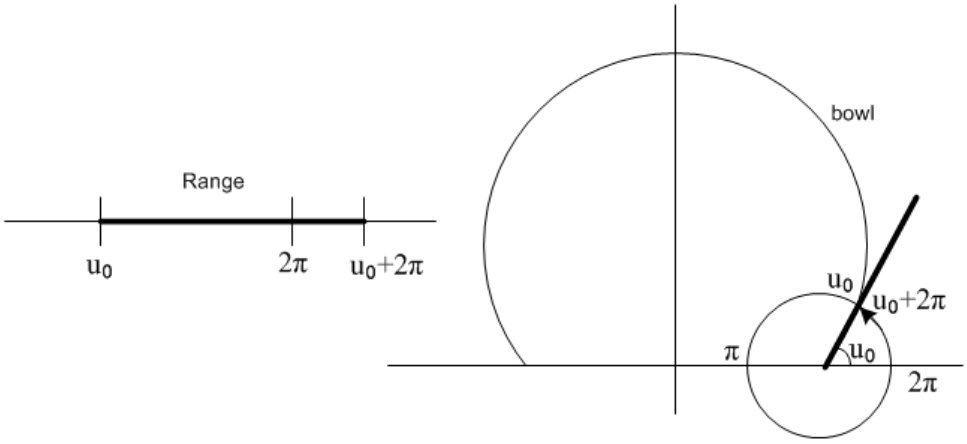

The bowl with label u_0 is shown, but we now see that this is really the label of the inside surface of the bowl. Our 2π wide range for u is going to be $(u_0, 2\pi+u_0)$ as shown by the heavy bar on the left. As you move along that bar left to right, you "move along the math bowls" whose bowl labels are represented by points on the small circle. The bottom half of the circle will be "lower bowls. The bowl at $2\pi\pm\varepsilon$ will be the bowl that is an iris. This iris occurs only once in our picture since we don't have $u_0 = 0$ in our range.

So, with this picture, we are going to have *a separate boundary condition for each side of the bowl*, and we can write this now as

$$[\ A(\tau)ch(u_0\tau) + B(\tau)sh(u_0\tau)\ ] = V_0\ \tau\ th(\pi\tau)\ \int_0^\infty d\xi\ sh(\xi)\ P_{i\tau-1/2}(ch\xi)/\sqrt{ch\xi - cosu_0}$$

$$[\ A(\tau)ch[(u_0+2\pi)\tau] + B(\tau)sh[(u_0+2\pi)\tau]\ ] = V_0\ \tau\ th(\pi\tau)\ \int_0^\infty d\xi\ sh(\xi)\ P_{i\tau-1/2}(ch\xi)/\sqrt{ch\xi - cos[u_0+2\pi]}$$

Now we have our two boundary conditions from which we can determine A and B. The sun shines!

5. The charged bowl problem and two interesting integrals.

The first interesting integral is this one

$$\int_1^\infty dx\ P_{i\tau-1/2}(x) / \sqrt{x - cosu_0} = \sqrt{2}\ ch[\tau(u_0-\pi)]/ (\tau\ sh(\pi\tau))$$

which I computed using Maple. See INCOMPLETE for more details. Nothing dramatic happens as the variable u_0 runs over $(0,\pi)$ which makes $cosu_0$ run from +1 to -1. The branch point of $\sqrt{x - cosu_0}$ is located at $z = cosu_0$ and when $u_0 = 0$, $z = 1$ and this branch point just touches the 1 end of the integral. I *think* we can say $cos[u_0+2\pi] = cosu_0$ in the second integral above, so let's assume that for the moment.

[I have now examined this pretty hard. There is not motion onto other sheets as we run u_0 from 0 to π and then on to 2π. In the range $(\pi,2\pi)$ $cosu_0$ just repeats its same value, truly nothing strange happens.]

Then we have our boundary conditions:

$$[\ A(\tau)ch(u_0\tau) + B(\tau)sh(u_0\tau)\ ] = V_0\ \tau\ th(\pi\tau)\ \sqrt{2}\ ch[\tau(u_0-\pi)]/ (\tau\ sh(\pi\tau)$$

$$[\ A(\tau)ch[(u_0+2\pi)\tau] + B(\tau)sh[(u_0+2\pi)\tau]\ ] = V_0\ \tau\ th(\pi\tau)\ \sqrt{2}\ ch[\tau(u_0-\pi)]/ (\tau\ sh(\pi\tau)$$

or

$$[\ A(\tau)ch(u_0\tau) + B(\tau)sh(u_0\tau)\ ] = V_0\ \sqrt{2}\ ch[\tau(u_0-\pi)]/ ch(\pi\tau)$$

$$[\ A(\tau)ch[(u_0+2\pi)\tau] + B(\tau)sh[(u_0+2\pi)\tau]\ ] = V_0\ \sqrt{2}\ ch[\tau(u_0-\pi)]/ ch(\pi\tau)$$

So the LHS's are equal, our first fact, so we can say

$$A(\tau)ch(u_0\tau) + B(\tau)sh(u_0\tau) = A(\tau)ch[(u_0+2\pi)\tau] + B(\tau)sh[(u_0+2\pi)\tau]$$

$$+ B(\tau)sh(u_0\tau) - B(\tau)sh[(u_0+2\pi)\tau] = A(\tau)ch[(u_0+2\pi)\tau] - A(\tau)ch(u_0\tau)$$

$$A(\tau)\ \{\ ch[(u_0+2\pi)\tau] - ch(u_0\tau)\ \} = -\ B(\tau)\ \{\ sh[(u_0+2\pi)\tau] - sh(u_0\tau)\ \}$$

We can then use Schaum p 28

$$sh(a+x) - sh(x) = 2\ ch(a/2+x)sh(a/2) \qquad x = u_0\tau \quad a = 2\pi\tau \qquad a/2+x = (\pi+u_0)\tau$$
$$ch(a+x) - ch(x) = 2\ sh(a/2+x)sh(a/2)$$

$$sh[(u_0+2\pi)\tau] - sh(u_0\tau) = 2\ ch[(\pi+u_0)\tau]sh(\pi\tau)$$
$$ch[(u_0+2\pi)\tau] - ch(u_0\tau) = 2\ sh[(\pi+u_0)\tau]sh(\pi\tau)$$

Then we have

$$A(\tau)\ \{\ ch[(u_0+2\pi)\tau] - ch(u_0\tau)\ \} = -\ B(\tau)\ \{\ sh[(u_0+2\pi)\tau] - sh(u_0\tau)\ \}$$

$$A(\tau)\ \{\ 2\ sh[(\pi+u_0)\tau]sh(\pi\tau)\ \} = -\ B(\tau)\ \{\ 2\ ch[(\pi+u_0)\tau]sh(\pi\tau)\ \}$$

$$A(\tau)\ sh[(\pi+u_0)\tau] = -\ B(\tau)\ ch[(\pi+u_0)\tau]$$

$$B(\tau) = -\ A(\tau)\ th[(\pi+u_0)\tau]$$

which is a fairly simple connection between B and A. Now we can use our first equation above:

$$[\ A(\tau)ch(u_0\tau) + B(\tau)sh(u_0\tau)\ ] = V_0\sqrt{2}\ ch[\tau(u_0-\pi)]/\ ch(\pi\tau)$$

$$[\ A(\tau)ch(u_0\tau) - A(\tau)\ th[(\pi+u_0)\tau]\ sh(u_0\tau)\ ] = V_0\sqrt{2}\ ch[\tau(u_0-\pi)]\ /\ ch(\pi\tau)$$

$$A(\tau)\ [ch(u_0\tau) - th[(\pi+u_0)\tau]\ sh(u_0\tau)\ ] = V_0\sqrt{2}\ ch[\tau(u_0-\pi)]\ /\ ch(\pi\tau)$$

$$ch(\pi\tau)A(\tau) = V_0\sqrt{2}\ ch[\tau(u_0-\pi)]/\ [ch(u_0\tau) - th[(\pi+u_0)\tau]\ sh(u_0\tau)\ ] \qquad \text{// now do * } ch[(\pi+u_0)\tau]$$

$$ch(\pi\tau)\ A(\tau) = V_0\sqrt{2}\ ch[\tau(u_0-\pi)]\ ch[(\pi+u_0)\tau]\ /\ [ch[(\pi+u_0)\tau]ch(u_0\tau) - sh[(\pi+u_0)\tau]\ sh(u_0\tau)\ ]$$

The denominator is (Schaum p 27) recognized to be

$$ch\ \{\ [(\pi+u_0)\tau] - u_0\tau\ \} = ch\ (\pi\tau)$$

so now we have

$$ch(\pi\tau)A(\tau) = V_0\sqrt{2}\ ch[\tau(u_0-\pi)]\ ch[(\pi+u_0)\tau]\ /\ ch\ (\pi\tau)$$

$$A(\tau) = V_0\sqrt{2}\ ch[(\pi-u_0)\tau]\ ch[(\pi+u_0)\tau]\ /\ ch^2(\pi\tau)$$

Then we have

$$B(\tau) = -A(\tau)\,th[(\pi+u_0)\tau] = -V_0\sqrt{2}\,ch[(\pi-u_0)\tau]\,ch[(\pi+u_0)\tau]\;th[(\pi+u_0)\tau] / ch^2(\pi\tau)$$

$$= -V_0\sqrt{2}\,ch[(\pi-u_0)\tau]\,sh[(\pi+u_0)\tau] / ch^2(\pi\tau)$$

So we arrive at some fairly simple results, which are

$$A(\tau) = V_0\sqrt{2}\,ch[(\pi-u_0)\tau]\,ch[(\pi+u_0)\tau] / ch^2(\pi\tau)$$
$$B(\tau) = -V_0\sqrt{2}\,ch[(\pi-u_0)\tau]\,sh[(\pi+u_0)\tau] / ch^2(\pi\tau)$$

and we can now install these into our potential form to get

$$V(\xi,u) = \sqrt{ch\xi - cosu}\;\int_0^\infty d\tau\, P_{i\tau-1/2}(ch\xi)\{\,A(\tau)ch(u\tau) + B(\tau)sh(u\tau)\,\} \qquad (3.3)$$

$$= V_0\sqrt{2}\,\sqrt{ch\xi - cosu}\;\int_0^\infty d\tau P_{i\tau-1/2}(ch\xi)\,ch[(\pi-u_0)\tau]\,\{ch[(\pi+u_0)\tau]ch(u\tau) - sh[(\pi+u_0)\tau]\,sh(u\tau)\,\}/\,ch^2(\pi\tau)$$

Now we recognize {..} to be $ch[(\pi+u_0-u)\tau]$ (S p 27), and we have

$$V(\xi,u)= V_0\sqrt{2}\;\sqrt{ch\xi - cosu}\;\int_0^\infty d\tau\, P_{i\tau-1/2}(ch\xi)\,ch[(\pi-u_0)\tau]\,ch[(\pi+u_0-u)\tau] / ch^2(\pi\tau)$$

and I think this is as simple as we can get. <u>The above is the purported potential of our charged bowl u_0.</u>

My first response: are there any limits we can take! Sure. The key fact here is going to be this:

$$ch[(\pi+u_0-u)\tau]\,|^{u=u0} = ch(\pi\tau)$$
$$ch[(\pi+u_0-u)\tau]\,|^{u=u0+2\pi} = ch(\pi\tau)$$

and that is why we get the same RHS for V(ξ,u) above with these two values. So just consider $u=u_0$

$$V_0 = V(\xi,u_0)= V_0\sqrt{2}\;\sqrt{ch\xi - cosu_0}\;\int_0^\infty d\tau\, P_{i\tau-1/2}(ch\xi)\,ch[(\pi-u_0)\tau]\,ch[(\pi)\tau] / ch^2(\pi\tau)$$

$$= V_0\sqrt{2ch\xi - 2cosu_0}\;\int_0^\infty d\tau\, P_{i\tau-1/2}(ch\xi)\,ch[(\pi-u_0)\tau] / ch(\pi\tau)$$

which tells us that

$$I \equiv \int_0^\infty d\tau\, P_{i\tau-1/2}(ch\xi)\,ch[(\pi-u_0)\tau] / ch(\pi\tau) = 1/\sqrt{2ch\xi - 2cosu_0} \equiv I_1 + I_2$$

My big source on this is the **Boeing** doc. If we look there at page 28 third integral we see something we might be able to use. Our integral above is this:

$$I \equiv \int_0^\infty d\tau\, P_{i\tau-1/2}(ch\xi)\, \cosh[(\pi-u_0)\tau]\, \mathrm{sech}(\pi\tau)$$

so we match on the sech(πτ) part. Let's now define

$$(\pi-u_0) = ia \qquad \Rightarrow \qquad \cosh[(\pi-u_0)\tau] = \cosh(ia\tau) = \cos(a\tau)$$

Then we have a match. Set k = 0 and the integral Boeing shows claims to be (note that y = chξ)

$$2^{-1/2}\,(y+\cosh(a)^{-1/2}\; P_0(\text{messy argument}) = 2^{-1/2}\,[y+\cosh(a)]^{-1/2}$$

But $\cosh(a) = \cos(ia) = \cos(\pi-u_0) = -\cos u_0$ so we seem to get

$$= 2^{-1/2}\,[ch\xi - \cos u_0]^{-1/2} = [2ch\xi - 2\cos u_0]^{-1/2}$$

and there you have it !!!

So I have 100% confirmed that my proposed bowl potential meets both boundary conditions, but I have not found it quoted anywhere! Since I do have a quote of the two-bowl problem, let's do that next and at least

(1) I will have a result I can check with an external source

(2) I can then take a limit of that result and see if I get the above single bowl result.

To summarize, here are two major results of this section:

(a) The potential of a charged bowl with label u_0 in $(0,\pi)$ is given by

$$V(\xi,u) = V_0\sqrt{2}\;\sqrt{ch\xi - \cos u}\;\int_0^\infty d\tau\, P_{i\tau-1/2}(ch\xi)\, ch[(\pi-u_0)\tau]\, ch[(\pi+u_0-u)\tau]\; / \,ch^2(\pi\tau)$$

(b) We have confirmed the following interesting integrals :

$$\int_1^\infty dx\, P_{i\tau-1/2}(x) / \sqrt{x-\cos u_0} = \sqrt{2}\; ch[\tau(u_0-\pi)]/(\tau\, sh(\pi\tau))$$

$$\int_0^\infty d\tau\, P_{i\tau-1/2}(ch\xi)\, ch[(\pi-u_0)\tau] / ch(\pi\tau) = 1/\sqrt{2ch\xi - 2\cos u_0}$$

Question: What can we say about the convergence of our potential integral above?

$$\int_0^\infty d\tau\, P_{i\tau-1/2}(ch\xi)\, ch[(\pi-u_0)\tau]\, ch[(\pi+u_0-u)\tau] \qquad / ch^2(\pi\tau)$$

Ignoring the P part, we have this large τ behavior of the integrand

$$ch[(\pi-u_0)\tau]\, ch[(\pi+u_0-u)\tau] \quad / ch^2(\pi\tau) \sim e^{|(\pi-u0)\tau|}\, e^{|(\pi+u0-u)\tau|}\, e^{-2\pi\tau}$$



For an upper bowl, u_0 lies in the range $(0,\pi)$ so $u_0 < \pi$ and $\pi-u_0 > 0$ so we can write the above as

$$\sim e^{(\pi-u0)\tau}\, e^{|(\pi+u0-u)|\tau}\, e^{-2\pi\tau}$$

Convergence then requires this:

$$(\pi- u_0) + |(\pi+ u_0-u)| - 2\pi < 0$$

or

$$|(\pi+u_0-u)| < \pi+u_0$$

To see if this is true for our allowed range of u, we consider two cases

Case 1: $\pi+u_0-u> 0 \Rightarrow u < \pi+u_0$

$(\pi+u_0-u) < \pi+u_0$?
$-u < 0$? yes

Case 2: $\pi+u_0-u< 0 \Rightarrow u > \pi+u_0$

$-(\pi+u_0-u) < \pi+u_0$?
$u < 2\pi+2u_0$? yes because $u < 2\pi + u_0$

So yes, no matter what value u takes in its range, the exponent is negative and the integral converges.

6. The double bowl problem.

We back way up to this point. Define $u_0' = (u_0+2\pi)$. Our two boundary conditions are

$$V_0 = \sqrt{ch\xi - cosu_0} \qquad \int_0^\infty d\tau\, P_{i\tau-1/2}(ch\xi)\, [\, A(\tau)ch(u_0'\tau) \qquad + B(\tau)sh(u_0'\tau)\,]$$

$$V_2 = \sqrt{ch\xi - cosu_2} \qquad \int_0^\infty d\tau\, P_{i\tau-1/2}(ch\xi)\, [\, A(\tau)ch(u_2\tau) \qquad + B(\tau)sh(u_2\tau)\,]$$

and the inversions using Mehler-Fock are (just mimic the above)

$$[\, A(\tau)ch(u_0'\tau) + B(\tau)sh(u_0'\tau)\,] = V_0\, \tau\, th(\pi\tau) \int_0^\infty d\xi\, sh(\xi)\, P_{i\tau-1/2}(ch\xi)/\sqrt{ch\xi - cosu_0}$$

$$[\, A(\tau)ch(u_2\tau) + B(\tau)sh(u_2\tau)\,] = V_2\, \tau\, th(\pi\tau) \int_0^\infty d\xi\, sh(\xi)\, P_{i\tau-1/2}(ch\xi)/\sqrt{ch\xi - cosu_2}$$

And here is are new picture. Our range is smaller now, we are only interested in the exterior problem:

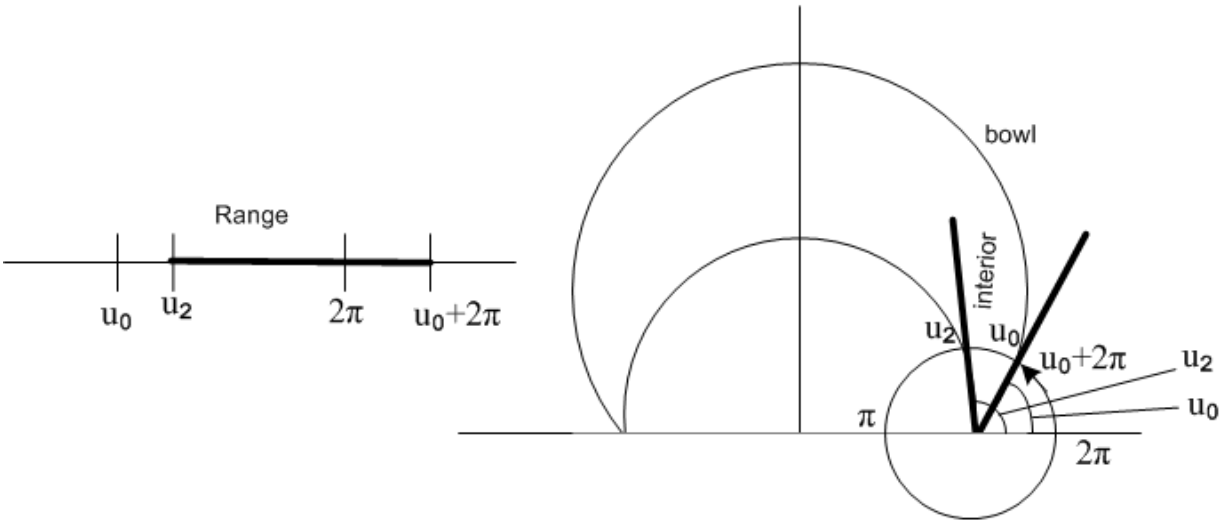

The integrals are [note that this RHS factor $\text{ch}[\tau(\pi-u_0)]$ makes its way through all the algebra]

$$\int_1^\infty dx\, P_{i\tau-1/2}(x) / \sqrt{x - \cos u_0} = \sqrt{2}\, \text{ch}[\tau(\pi-u_0)]/ (\tau\, \text{sh}(\pi\tau)) \qquad 0 \le u_0 \le 2\pi$$

$$\int_1^\infty dx\, P_{i\tau-1/2}(x) / \sqrt{x - \cos u_2} = \sqrt{2}\, \text{ch}[\tau(\pi-u_2)]/ (\tau\, \text{sh}(\pi\tau)) \qquad 0 \le u_2 \le 2\pi$$

so our two BC's are then

$$[\, A(\tau)\text{ch}(u_0'\tau) + B(\tau)\text{sh}(u_0'\tau)\,] = V_0\, \tau\, \text{th}(\pi\tau)\ \sqrt{2}\, \text{ch}[\tau(\pi-u_0)]/ (\tau\, \text{sh}(\pi\tau))$$
$$[\, A(\tau)\text{ch}(u_2\tau) + B(\tau)\text{sh}(u_2\tau)\,] = V_2\, \tau\, \text{th}(\pi\tau)\ \sqrt{2}\, \text{ch}[\tau(\pi-u_2)]/ (\tau\, \text{sh}(\pi\tau))$$

$$[\, A(\tau)\text{ch}(u_0'\tau) + B(\tau)\text{sh}(u_0'\tau)\,]\, \tau\, \text{sh}(\pi\tau) = V_0\, \tau\, \text{th}(\pi\tau)\ \sqrt{2}\, \text{ch}[\tau(\pi-u_0)]$$
$$[\, A(\tau)\text{ch}(u_2\tau) + B(\tau)\text{sh}(u_2\tau)\,]\, \tau\, \text{sh}(\pi\tau) = V_2\, \tau\, \text{th}(\pi\tau)\ \sqrt{2}\, \text{ch}[\tau(\pi-u_2)]$$

$$[\, A(\tau)\text{ch}(u_0'\tau) + B(\tau)\text{sh}(u_0'\tau)\,]\, \text{ch}(\pi\tau) = V_0\ \sqrt{2}\, \text{ch}[\tau(\pi-u_0)] \qquad (*)$$
$$[\, A(\tau)\text{ch}(u_2\tau) + B(\tau)\text{sh}(u_2\tau)\,]\, \text{ch}(\pi\tau) = V_2\ \sqrt{2}\, \text{ch}[\tau(\pi-u_2)]$$

I entered these in Maple to solve for A and B, but Maple makes a mess for some reason. So do it by hand here. First, divide

$$[\, A(\tau)\text{ch}(u_0'\tau) + B(\tau)\text{sh}(u_0'\tau)\,]/ [\, A(\tau)\text{ch}(u_2\tau) + B(\tau)\text{sh}(u_2\tau)\,] = V_0\ \text{ch}[\tau(\pi-u_0)] / V_2\ \text{ch}[\tau(\pi-u_2)]$$

$$[\, A(\tau)\text{ch}(u_0'\tau) + B(\tau)\text{sh}(u_0'\tau)\,]\, V_2\ \text{ch}[\tau(\pi-u_2)] = [\, A(\tau)\text{ch}(u_2\tau) + B(\tau)\text{sh}(u_2\tau)\,] V_0\ \text{ch}[\tau(\pi-u_0)]$$

$$A(\tau)\, \{\, V_2\, \text{ch}(u_0'\tau)\, \text{ch}[\tau(\pi-u_2)] - V_0 \text{ch}(u_2\tau)\, \text{ch}[\tau(\pi-u_0)]\,\} \equiv A(\tau)\, P$$

$$= B(\tau)\ \{\ V_0 sh(u_2\tau)\ ch[\tau(\pi-u_0)]\ - V_2 sh(u_0'\tau)\ ch[\tau(\pi-u_2)]\ \}\quad \equiv\ B(\tau)\ Q$$

So we conclude that

$$A(\tau)\ P = B(\tau)\ Q$$

Now pick the first equation in (*) and process it

$$[\ A(\tau)ch(u_0'\tau) + B(\tau)sh(u_0'\tau)\ ]\ ch(\pi\tau)\quad = V_0\ \sqrt{2}\ ch[\tau(\pi-u_0)]$$

$$[\ A(\tau)Qch(u_0'\tau) + B(\tau)Qsh(u_0'\tau)\ ]\ ch(\pi\tau)\quad = V_0\ \sqrt{2}\ Qch[\tau(\pi-u_0)]$$

$$[\ A(\tau)Qch(u_0'\tau) + A(\tau)\ P\ sh(u_0'\tau)\ ]\ ch(\pi\tau)\quad = V_0\ \sqrt{2}\ Qch[\tau(\pi-u_0)]$$

$$A(\tau)\ [Qch(u_0'\tau) + P\ sh(u_0'\tau)\ ]\ ch(\pi\tau)\quad = V_0\ \sqrt{2}\ Qch[\tau(\pi-u_0)]$$

$$ch(\pi\tau)A(\tau) = V_0\ \sqrt{2}\ Qch[\tau(\pi-u_0)]\ /\ [Qch(u_0'\tau) + P\ sh(u_0'\tau)\ ]$$

Now multiply by P to get

$$ch(\pi\tau)A(\tau)P = V_0\ \sqrt{2}\ PQch[\tau(\pi-u_0)]\ /\ [Qch(u_0'\tau) + P\ sh(u_0'\tau)\ ]$$

$$ch(\pi\tau)\ B(\tau)\ Q = V_0\ \sqrt{2}\ PQch[\tau(\pi-u_0)]\ /\ [Qch(u_0'\tau) + P\ sh(u_0'\tau)\ ]$$

$$ch(\pi\tau)\ B(\tau) = V_0\ \sqrt{2}\ Pch[\tau(\pi-u_0)]\ /\ [Qch(u_0'\tau) + P\ sh(u_0'\tau)\ ]$$

So here then are our two coefficients

$$ch(\pi\tau)\ A(\tau) = V_0\ \sqrt{2}\ Qch[\tau(\pi-u_0)]\ /\ [Qch(u_0'\tau) + P\ sh(u_0'\tau)\ ]$$
$$ch(\pi\tau)\ B(\tau) = V_0\ \sqrt{2}\ Pch[\tau(\pi-u_0)]\ /\ [Qch(u_0'\tau) + P\ sh(u_0'\tau)\ ]$$

$$P = \{\ V_2\ ch(u_0'\tau)\ ch[\tau(\pi-u_2)] - V_0 ch(u_2\tau)\ ch[\tau(\pi-u_0)]\ \} \quad =$$
$$Q = \{\ V_0 sh(u_2\tau)\ ch[\tau(\pi-u_0)]\ - V_2 sh(u_0'\tau)\ ch[\tau(\pi-u_2)]\ \}$$

Our problem solution is then

$$V(\xi,u) = \sqrt{ch\xi - cosu}\ \int_0^\infty d\tau\ P_{i\tau-1/2}(ch\xi)[\ A(\tau)ch(u\tau) + B(\tau)sh(u\tau)\ ] \qquad (3.3)$$

$$= \sqrt{ch\xi - cosu}\ \int_0^\infty d\tau\ P_{i\tau-1/2}(ch\xi)[\ A(\tau)\ ch(\pi\tau)ch(u\tau) + B(\tau)\ ch(\pi\tau)sh(u\tau)\ ]/\ ch(\pi\tau)$$

And our bracket [..] object here is then

bracket = [$A(\tau)\, ch(\pi\tau)ch(u\tau) + B(\tau)\, ch(\pi\tau)sh(u\tau)$]

$= V_0 \sqrt{2}\, Qch[\tau(\pi-u_0)]\, ch(u\tau) / [Qch(u_0'\tau) + P\, sh(u_0'\tau)]$

$+ V_0 \sqrt{2}\, Pch[\tau(\pi-u_0)]\, sh(u\tau) / [Qch(u_0'\tau) + P\, sh(u_0'\tau)]$

$= V_0 \sqrt{2}\, ch[\tau(\pi-u_0)] [\, Q\, ch(u\tau) + P\, sh(u\tau)\,] / [Qch(u_0'\tau) + P\, sh(u_0'\tau)]$

I don't think this is going to simplify with these two general constant potential values.

Now suppose $V_2 = V_0$. Then we have

$P = V_0\{\, ch(u_0'\tau)\, ch[\tau(\pi-u_2)] - ch(u_2\tau)\, ch[\tau(\pi-u_0)]\,\}$
$Q = V_0\{\, sh(u_2\tau)\, ch[\tau(\pi-u_0)] - sh(u_0'\tau)\, ch[\tau(\pi-u_2)]\,\}$

and as we look at our bracket object, we see that V_0 will cancel apart from the leading factor, so let's just redefine P and Q and write this thing

bracket = $V_0 \sqrt{2}\, ch[\tau(\pi-u_0)] [\, Q\, ch(u\tau) + P\, sh(u\tau)\,] / [Qch(u_0'\tau) + P\, sh(u_0'\tau)]$
$P = \{\, ch(u_0'\tau)\, ch[\tau(\pi-u_2)] - ch(u_2\tau)\, ch[\tau(\pi-u_0)]\,\}$
$Q = \{\, sh(u_2\tau)\, ch[\tau(\pi-u_0)] - sh(u_0'\tau)\, ch[\tau(\pi-u_2)]\,\}$

The denominator becomes

$Qch(u_0'\tau) + P\, sh(u_0'\tau)$

$= \{\, sh(u_2\tau)\, ch[\tau(\pi-u_0)] - sh(u_0'\tau)\, ch[\tau(\pi-u_2)]\,\} ch(u_0'\tau)$
$+ \{\, ch(u_0'\tau)\, ch[\tau(\pi-u_2)] - ch(u_2\tau)\, ch[\tau(\pi-u_0)]\,\} sh(u_0'\tau)$

$= \{\, ch(u_0'\tau)sh(u_2\tau)\, ch[\tau(\pi-u_0)] - ch(u_0'\tau)sh(u_0'\tau)\, ch[\tau(\pi-u_2)]\,\}$
$+ \{\, ch(u_0'\tau)\, sh(u_0'\tau)ch[\tau(\pi-u_2)] - ch(u_2\tau)\, sh(u_0'\tau)ch[\tau(\pi-u_0)]\,\}$

$= ch[\tau(\pi-u_0)]\, [ch(u_0'\tau)sh(u_2\tau) - ch(u_2\tau)\, sh(u_0'\tau)]$
$+ ch[\tau(\pi-u_2)]\, [ch(u_0'\tau)\, sh(u_0'\tau) - ch(u_0'\tau)sh(u_0'\tau)\,]$

Handily, the entire second [..] = 0 here so we just get

$= ch[\tau(\pi-u_0)]\, [ch(u_0'\tau)sh(u_2\tau) - ch(u_2\tau)\, sh(u_0'\tau)]$

$= ch[\tau(\pi-u_0)]\, [ch(u_0'\tau)sh(u_2\tau) - sh(u_0'\tau)ch(u_2\tau)]$

$= - ch[\tau(\pi-u_0)]\, [sh(u_0'\tau)ch(u_2\tau) - ch(u_0'\tau)sh(u_2\tau)]$

$= - ch[\tau(\pi-u_0)]\, [sh[(u_0'-u_2)\tau]] = - ch[(\pi-u_0)\tau]\, sh[(u_0'-u_2)\tau]$

So we have shown this nice fact

$$Q\,ch(u_0'\tau) + P\,sh(u_0'\tau) = -\,ch[(\pi-u_0)\tau]\,sh[(u_0'-u_2)\tau]$$

Now let's work on the numerator factor

$$P = \{\, ch(u_0'\tau)\, ch[\tau(\pi-u_2)] - ch(u_2\tau)\, ch[\tau(\pi-u_0)] \,\}$$
$$Q = \{\, sh(u_2\tau)\, ch[\tau(\pi-u_0)] - sh(u_0'\tau)\, ch[\tau(\pi-u_2)] \,\}$$

$$[\, Q\, ch(u\tau) + P\, sh(u\tau) \,]$$

$$= \{\, sh(u_2\tau)\, ch[\tau(\pi-u_0)] - sh(u_0'\tau)\, ch[\tau(\pi-u_2)] \,\}\, ch(u\tau)$$
$$+ \{\, ch(u_0'\tau)\, ch[\tau(\pi-u_2)] - ch(u_2\tau)\, ch[\tau(\pi-u_0)] \,\}\, sh(u\tau)$$

$$= \{\, sh(u_2\tau)\, ch(u\tau)ch[\tau(\pi-u_0)] - sh(u_0'\tau)\, ch(u\tau)ch[\tau(\pi-u_2)] \,\}$$
$$+ \{\, ch(u_0'\tau)\, sh(u\tau)\, ch[\tau(\pi-u_2)] - ch(u_2\tau)\, sh(u\tau)\, ch[\tau(\pi-u_0)] \,\})$$

$$= ch[\tau(\pi-u_0)]\, \{\, sh(u_2\tau)\, ch(u\tau) - ch(u_2\tau)\, sh(u\tau)\}$$
$$+ ch[\tau(\pi-u_2)]\, \{\, ch(u_0'\tau)\, sh(u\tau) - sh(u_0'\tau)\, ch(u\tau) \,\}$$

$$= ch[\tau(\pi-u_0)]\, \{\, sh(u_2\tau)\, ch(u\tau) - ch(u_2\tau)\, sh(u\tau)\}$$
$$- ch[\tau(\pi-u_2)]\, \{\, sh(u_0'\tau)\, ch(u\tau) - ch(u_0'\tau)\, sh(u\tau)\}$$

$$= ch[\tau(\pi-u_0)]\, \{\, sh[(u_2-u)\tau]\}$$
$$- ch[\tau(\pi-u_2)]\, \{\, sh[(u_0'-u)\tau] \,\}$$

$$= sh[(u_2-u)\tau]\, ch[(\pi-u_0)\tau] - ch[(\pi-u_2)\tau]\, sh[(u_0'-u)\tau]$$

To summarize, we have now shown that

$$[\, Q\,ch(u_0'\tau) + P\,sh(u_0'\tau)] = -\,ch[(\pi-u_0)\tau]\,sh[(u_0'-u_2)\tau]$$
$$[\, Q\, ch(u\tau) + P\, sh(u\tau) \,] = sh[(u_2-u)\tau]\, ch[(\pi-u_0)\tau] - ch[(\pi-u_2)\tau]\, sh[(u_0'-u)\tau]$$

Nothing further can be done, but it is not too bad. So here is our claimed final result:

$$V(\xi,u) = \sqrt{ch\xi - cosu}\ \int_0^\infty d\tau\, P_{i\tau-1/2}(ch\xi)[\, A(\tau)\, ch(\pi\tau)ch(u\tau) + B(\tau)\, ch(\pi\tau)sh(u\tau) \,]/\, ch(\pi\tau)$$

$$= \sqrt{ch\xi - cosu}\ \int_0^\infty d\tau\, P_{i\tau-1/2}(ch\xi)[\ bracket\ ]/\, ch(\pi\tau)$$

$$bracket = V_0 \sqrt{2}\ ch[\tau(\pi-u_0)]\, [\, Q\, ch(u\tau) + P\, sh(u\tau) \,] / [Qch(u_0'\tau) + P\, sh(u_0'\tau)]$$

$$[Q\,ch(u_0'\tau) + P\,sh(u_0'\tau)] \;=\; -\,ch[(\pi-u_0)\tau]\,sh[(u_0'-u_2)\tau]$$
$$[\,Q\,ch(u\tau) + P\,sh(u\tau)\,] = \;sh[(u_2-u)\tau]\,ch[(\pi-u_0)\tau] \;- ch[(\pi-u_2)\tau]\,sh[(u_0'-u)\tau]$$

and assembling the pieces

$$V(\xi,u) = V_0\sqrt{2}\;\sqrt{ch\xi - cosu}\;\int_0^\infty d\tau\, P_{i\tau-1/2}(ch\xi) * ch[\tau(\pi-u_0)]$$

$$\{\,sh[(u_2-u)\tau]\,ch[(\pi-u_0)\tau] \;- ch[(\pi-u_2)\tau]\,sh[(u_0'-u)\tau]\} \,/\, \{-\,ch(\pi\tau)\,ch[(\pi-u_0)\tau]\,sh[(u_0'-u_2)\tau]\,\}$$

and I will change to get a plus sign, and I will cancel the two factors that cancel!

$$V(\xi,u) = V_0\sqrt{2}\,\sqrt{ch\xi - cosu}\;\int_0^\infty d\tau\, P_{i\tau-1/2}(ch\xi) * \qquad \text{// fix not done yet!!!}$$

$$\{\,ch[(\pi-u_2)\tau]\,sh[(u_0'-u)\tau] \;- ch[(\pi-u_0)\tau]sh[(u_2-u)\tau]\;\} \,/\, \{ch(\pi\tau)\,sh[(u_0'-u_2)\tau]\,\}$$

and we now install $u_0' = u_0+2\pi$ to get

$$V(\xi,u) = V_0\sqrt{2}\,\sqrt{ch\xi - cosu}\;\int_0^\infty d\tau\, P_{i\tau-1/2}(ch\xi) * \qquad \text{// fix not done yet!!!}$$

$$\{\,ch[(\pi-u_2)\tau]\,sh[(2\pi+u_0-u)\tau] \;- ch[(\pi-u_0)\tau]sh[(u_2-u)\tau]\;\} \,/\, \{ch(\pi\tau)\,sh[(2\pi+u_0-u_2)\tau]\,\}$$

This is "not bad" for such a complicated problem. What do we notice about this solution?

(1) The result is not symmetric under $u_0 \leftrightarrow u_2$. This agrees with the fact that the shape is not symmetric.

(2) Let's now consider the limit that $u_2 \to u_0$. We just plug in to get

$$V(\xi,u) = V_0\sqrt{2}\,\sqrt{ch\xi - cosu}\;\int_0^\infty d\tau\, P_{i\tau-1/2}(ch\xi)$$
$$\{\,ch[(\pi-u_0)\tau]\,sh[(2\pi+u_0-u)\tau] \;- ch[(\pi-u_0)\tau]sh[(u_0-u)\tau]\;\} \,/\, \{ch(\pi\tau)\,sh[(2\pi)\tau]\,\}$$

Now let's process the numerator {...}

$$\{\,ch[(\pi-u_0)\tau]\,sh[(2\pi+u_0-u)\tau] \;- ch[(\pi-u_0)\tau]sh[(u_0-u)\tau]\;\}$$

$$= ch[(\pi-u_0)\tau\;\{\,sh[(2\pi+(u_0-u))\tau] - sh[(u_0-u)\tau]\,\}$$

and we can call upon our claim above

$$sh(a+x) - sh(x) = 2\,ch(a/2+x)sh(a/2) \qquad a = 2\pi\tau \quad x = (u_0-u)\tau \quad a/2+x = (\pi+u_0-u)\tau$$

$$\Rightarrow \{ \text{sh}[(2\pi+(u_0-u))\tau] - \text{sh}[(u_0-u)\tau] \} = 2\,\text{ch}[(\pi+u_0-u)\tau]\text{sh}(\pi\tau)$$

$$\Rightarrow \{\ \}_{\mathbf{num}} = \text{ch}[(\pi-u_0)\tau]\ 2\,\text{ch}[(\pi+u_0-u)\tau]\text{sh}(\pi\tau)$$

Meanwhile

$$\{\ \}_{\mathbf{den}} = \{\text{ch}(\pi\tau)\ \text{sh}[(2\pi)\tau] \} = 2\,\text{ch}^2(\pi\tau)\text{sh}(\pi\tau)$$

So we end up with

$$\{\ \}_{\mathbf{num}} / \{\ \}_{\mathbf{den}} = \{ \text{ch}[(\pi-u_0)\tau]\ 2\,\text{ch}[(\pi+u_0-u)\tau]\text{sh}(\pi\tau)\} / \ 2\,\text{ch}^2(\pi\tau)\text{sh}(\pi\tau)$$

$$= \{ \text{ch}[(\pi-u_0)\tau]\ \text{ch}[(\pi+u_0-u)\tau] \} / \text{ch}^2(\pi\tau)$$

And then our single bowl limit of the double bowl result would be

$$V(\xi,u) = V_0 \sqrt{2}\ \sqrt{\text{ch}\xi - \text{cos}u}\ \int_0^\infty d\tau\ P_{i\tau-1/2}(\text{ch}\xi)$$

$$\{ \text{ch}[(\pi-u_0)\tau]\ \text{sh}[(2\pi+u_0-u)\tau]\ - \text{ch}[(\pi-u_0)\tau]\text{sh}[(u_0-u)\tau]\ \} / \{\text{ch}(\pi\tau)\ \text{sh}[(2\pi)\tau] \}$$

$$V(\xi,u) = V_0 \sqrt{2}\ \sqrt{\text{ch}\xi - \text{cos}u}\ \int_0^\infty d\tau\ P_{i\tau-1/2}(\text{ch}\xi)$$

$$\{ \text{ch}[(\pi-u_0)\tau]\ \text{ch}[(\pi+u_0-u)\tau] \} / \text{ch}^2(\pi\tau)$$

and this does agree with my single bowl result!

So let's back up to our established 2-bowl result:

$$V(\xi,u) = V_0 \sqrt{2}\ \sqrt{\text{ch}\xi - \text{cos}u}\ \int_0^\infty d\tau\ P_{i\tau-1/2}(\text{ch}\xi)\ *$$

$$\{ \text{ch}[(\pi-u_2)\tau]\ \text{sh}[(2\pi+u_0-u)\tau]\ - \text{ch}[(\pi-u_0)\tau]\text{sh}[(u_2-u)\tau]\ \} / \{\text{ch}(\pi\tau)\ \text{sh}[(2\pi+u_0-u_2)\tau] \}$$

Let's change the sign in the $\text{sh}[(u_2-u)\tau]$ argument and then swap the order of the two num bracket terms:

$$V(\xi,u) = V_0 \sqrt{2}\ \sqrt{\text{ch}\xi - \text{cos}u}\ \int_0^\infty d\tau\ P_{i\tau-1/2}(\text{ch}\xi)\ *$$

$$\{ \text{ch}[(\pi-u_0)\tau]\text{sh}[(u-u_2)\tau]\ +\ \text{ch}[(\pi-u_2)\tau]\ \text{sh}[(2\pi+u_0-u)\tau] \} / \{\text{ch}(\pi\tau)\ \text{sh}[(2\pi+u_0-u_2)\tau] \}$$

and this then is our FINAL FORM for the exterior potential of the two bowls.

Now look back at our picture for which this solution applies

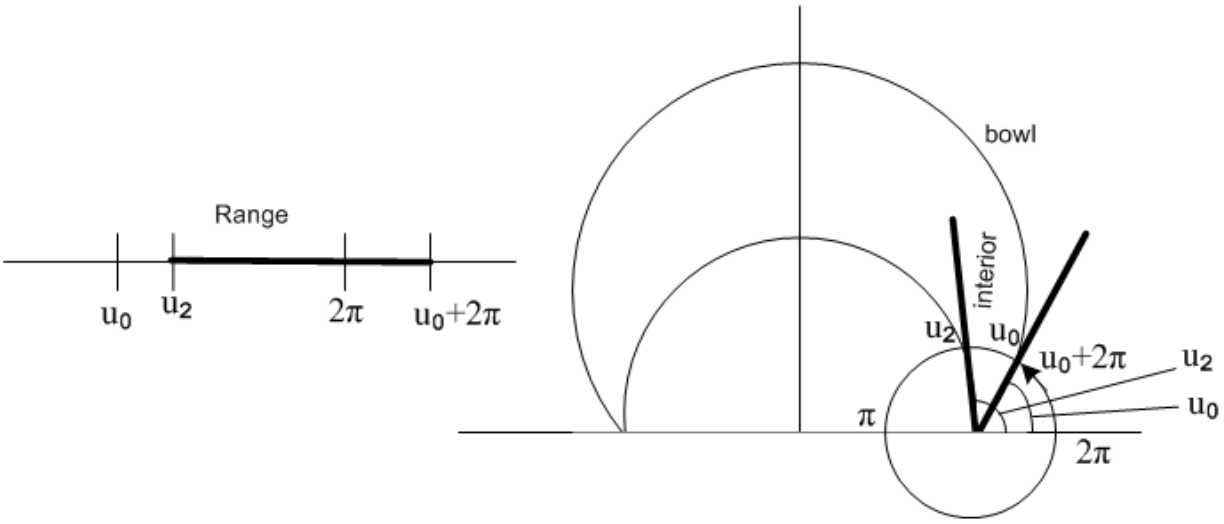

Imagine now that the u_0 bowl were a shallow upper bowl so that perhaps $u_0 = 7\pi/8$. We would associate with this bowl a "contact angle" of $\theta = \pi - u_0 = 1\pi/8$. So we write $u_0 = \pi - \theta$.

Next, imagine that the u_2 bowl were in fact a negative bowl of the same shape as the upper bowl, ie, it has the same contact angle θ. Then for that lower bowl we would have $u_2 = 9\pi/8$, as shown in this picture

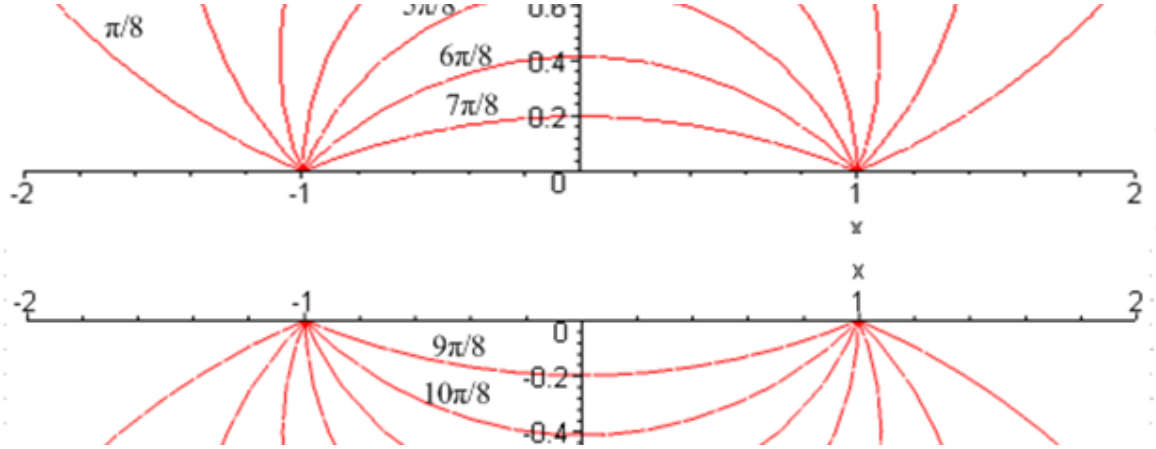

For this lower bowl then we have $u_2 = \pi + \theta$. So if we wanted to create a symmetric double-bowl object with the appearance of a normal convex lens where the contact angle of each half of the lens is θ, we would say

$u_0 = \pi - \theta$ // $= \beta_1$ of the Hu paper
$u_2 = \pi + \theta$ // $= \beta_2$ of the Hu paper

This says we should make this simple connection between our work above, and the Hu paper:

$u_0 = \beta_1 = \pi - \theta$
$u_2 = \beta_2 = \pi + \theta$

I was long unsure of this connection, but now it is rock solid.

7. Summary of Results:

(a) The Charged Bowl Problem

Here is our **picture of the single bowl problem**:

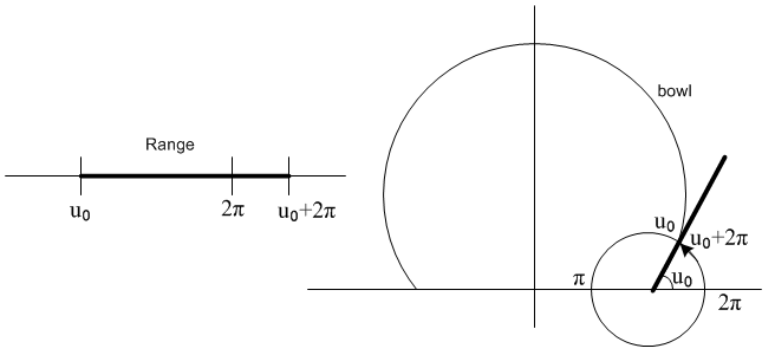

And here is the **solution to the single bowl problem**:

$$V(\xi,u)= V_0 \sqrt{2}\ \sqrt{ch\xi - cosu}\ \int_0^\infty d\tau\ P_{i\tau-1/2}(ch\xi)\ \ ch[(\pi-u_0)\tau]\ ch[(\pi+u_0-u)\tau] / ch^2(\pi\tau)$$

(b) The Double Bowl Problem

Here is our ***picture*** **of the double bowl exterior problem**:

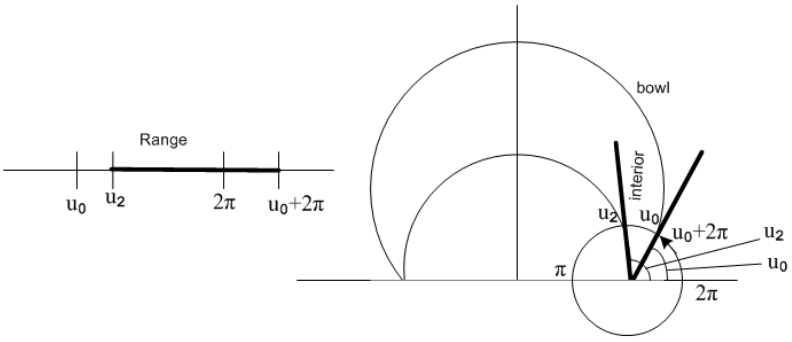

And here is the ***solution*** **to the double bowl exterior problem**:

$$V(\xi,u) = V_0 \sqrt{2}\ \sqrt{ch\xi - cosu}\ \int_0^\infty d\tau\ P_{i\tau-1/2}(ch\xi)\ *$$

$$\{ ch[(\pi-u_0)\tau]sh[(u-u_2)\tau] + ch[(\pi-u_2)\tau]\, sh[(2\pi+u_0-u)\tau] \} / \{ch(\pi\tau)\, sh[(2\pi+u_0-u_2)\tau]\}$$

(c) Double Bowl Problem expressed in Hu/Deegan notation

If we make the replacements $u_0 = \beta_1$ and $u_2 = \beta_2$ and $u = \beta$ and $\xi = \alpha$, this solution becomes

$$V(\alpha, \beta) = V_0 \sqrt{2}\, \sqrt{ch\alpha - cos\beta} \int_0^\infty d\tau\, P_{i\tau-1/2}(ch\xi) *$$

$$\{ ch[(\pi-\beta_1)\tau]sh[(\beta-\beta_2)\tau] + ch[(\pi-\beta_2)\tau]\, sh[(2\pi+\beta_1-\beta)\tau] \} / \{ch(\pi\tau)\, sh[(2\pi+\beta_1-\beta_2)\tau]\}$$

$$u = V\sqrt{2\cosh\alpha - 2\cos\beta}\int_0^\infty \frac{\cosh[(\pi-\beta_1)\tau]\sinh[(\beta-\beta_2)\tau] + \cosh[(\pi-\beta_2)\tau]\sinh[(2\pi+\beta_1-\beta)\tau]}{\cosh(\pi\tau)\sinh[(2\pi+\beta_1-\beta_2)\tau]} P_{-(1/2)+i\tau}(\cosh\alpha)\, d\tau \quad (22)$$

where below our substituted result I quote the Ho result. We are in exact agreement! This has been a long time coming.

(c) Bowl with a flat lid (Lebedev 503)

Suppose now we take u_2 to be a flat lid on our bowl. We know then that $u_2 = \beta_2 = \pi$, so our double bowl result then becomes

$$V(\alpha, \beta) = V_0 \sqrt{2}\, \sqrt{ch\alpha - cos\beta} \int_0^\infty d\tau\, P_{i\tau-1/2}(ch\xi) *$$

$$\{ ch[(\pi-\beta_1)\tau]sh[(\beta-\beta_2)\tau] + ch[(\pi-\beta_2)\tau]\, sh[(2\pi+\beta_1-\beta)\tau] \} / \{ch(\pi\tau)\, sh[(2\pi+\beta_1-\beta_2)\tau]\}$$

$$V(\alpha, \beta) = V_0 \sqrt{2}\, \sqrt{ch\alpha - cos\beta} \int_0^\infty d\tau\, P_{i\tau-1/2}(ch\xi) *$$

$$\{ ch[(\pi-\beta_1)\tau]sh[(\beta-\pi)\tau] + ch[(\pi-\pi)\tau]\, sh[(2\pi+\beta_1-\beta)\tau] \} / \{ch(\pi\tau)\, sh[(2\pi+\beta_1-\pi)\tau]\}$$

$$V(\alpha, \beta) = V_0 \sqrt{2}\, \sqrt{ch\alpha - cos\beta} \int_0^\infty d\tau\, P_{i\tau-1/2}(ch\xi) *$$

$$\{ ch[(\pi-\beta_1)\tau]sh[(\beta-\pi)\tau] + sh[(2\pi+\beta_1-\beta)\tau] \} / \{ch(\pi\tau)\, sh[(\pi+\beta_1)\tau]\}$$

$$V(\alpha, \beta) = V_0 \sqrt{2}\, \sqrt{ch\alpha - cos\beta} \int_0^\infty d\tau\, P_{i\tau-1/2}(ch\xi) *$$

$$\{ sh[(2\pi+\beta_1-\beta)\tau] - ch[(\pi-\beta_1)\tau]sh[(\pi-\beta)\tau] \} / \{ sh[(\pi+\beta_1)\tau]\, ch(\pi\tau) \}$$

$$u(\alpha, \beta) = V\sqrt{2\cosh\alpha - 2\cos\beta}$$
$$\times \int_0^\infty [\sinh(2\pi + \beta_0 - \beta)\tau - \cosh(\pi - \beta_0)\tau$$
$$\times \sinh(\pi - \beta)\tau] \frac{P_{-\frac{1}{2}+i\tau}(\cosh\alpha)}{\sinh(\pi + \beta_0)\tau \cosh\pi\tau} d\tau,$$

where I have now quoted the result of Lebedev's Problem 503 and we are in exact agreement! This has also been a long time coming!!

(d) The symmetric double bowl case (double sessile drop)

Now just for fun, suppose we do the **concave lens doubling of the sessile drop**. We will set

$u_0 = \beta_1 = [\pi-\theta]$
$u_2 = \beta_2 = [\pi+\theta]$

where θ is the small contact angle for the drop. Our potential result has

$$V(\alpha, \beta) = V_0 \sqrt{2}\sqrt{ch\alpha - \cos\beta} \int_0^\infty d\tau\, P_{i\tau-1/2}(ch\xi) *$$
$$\{ ch[(\pi-\beta_1)\tau]sh[(\beta-\beta_2)\tau] + ch[(\pi-\beta_2)\tau]\, sh[(2\pi+\beta_1-\beta)\tau] \} / \{ch(\pi\tau)\, sh[(2\pi+\beta_1-\beta_2)\tau]\}$$

$$V(\alpha, \beta) = V_0 \sqrt{2}\sqrt{ch\alpha - \cos\beta} \int_0^\infty d\tau\, P_{i\tau-1/2}(ch\xi) *$$
$$\{ ch[(\pi-[\pi-\theta])\tau]sh[(\beta-[\pi+\theta])\tau] + ch[(\pi-[\pi+\theta])\tau]\, sh[(2\pi+[\pi-\theta]-\beta)\tau] \} / \{ch(\pi\tau)\, sh[(2\pi+[\pi-\theta]-[\pi+\theta])\tau]\}$$
$$\{ ch[(\theta)\tau]sh[(\beta-\pi-\theta])\tau] + ch[(\theta)\tau]\, sh[(3\pi-\theta-\beta)\tau] \} / \{ch(\pi\tau)\, sh[(2\pi-2\theta])\tau]\}$$
$$\{ ch[\theta\tau]sh[(\beta-\pi-\theta])\tau] + ch[\theta\tau]\, sh[(3\pi-\theta-\beta)\tau] \} / \{ch(\pi\tau)\, sh[2(\pi-\theta])\tau]\}$$
$$ch[\theta\tau]\{sh[(\beta-\pi-\theta])\tau] + sh[(3\pi-\theta-\beta)\tau] \} / \{ch(\pi\tau)\, sh[2(\pi-\theta])\tau]\}$$
$$ch[\theta\tau]\{sh[(\beta-\pi-\theta])\tau] - sh[(-3\pi+\theta+\beta)\tau] \} / \{ch(\pi\tau)\, sh[2(\pi-\theta])\tau]\}$$
$$ch[\theta\tau]\{sh[(\beta-\pi-\theta])\tau] - sh[(\beta-3\pi+\theta)\tau] \} / \{ch(\pi\tau)\, sh[2(\pi-\theta])\tau]\}$$

But now write

$$sh[(\beta-\pi-\theta])\tau] - sh[(\beta-3\pi+\theta)\tau] = 2\, ch(sum/2)sh(diff/2)$$
$$= 2\, ch[(\beta-2\pi)\tau]sh[(-\theta+\pi)\tau] = 2\, ch[(2\pi-\beta)\tau]\, sh[(\pi-\theta)\tau]$$

giving

$$V(\alpha, \beta) = V_0 \sqrt{2} \sqrt{ch\alpha - \cos\beta} \int_0^\infty d\tau \, P_{i\tau-1/2}(ch\xi) *$$

$$ch[\theta\tau]\{ 2 \, ch[(2\pi-\beta)\tau] \, sh[(\pi-\theta)\tau]\} / \{ch(\pi\tau) \, sh[2(\pi-\theta])\tau] \}$$

Now write

$$sh[2(\pi-\theta])\tau] = 2 \, sh[(\pi-\theta])\tau] \, ch[(\pi-\theta])\tau]$$

and the 2 sh cancels the numerator and we are left with

$$V(\alpha, \beta) = V_0 \sqrt{2} \sqrt{ch\alpha - \cos\beta} \int_0^\infty d\tau \, P_{i\tau-1/2}(ch\xi) *$$

$$ch[\theta\tau] \, ch[(2\pi-\beta)\tau] / \{ch(\pi\tau) \, ch[(\pi-\theta])\tau] \}$$

$$\frac{c - c_\infty}{c_v - c_\infty} = \sqrt{2\cosh\alpha - 2\cos\beta} \int_0^\infty \frac{\cosh(\theta\tau)}{\cosh(\pi\tau)} \frac{\cosh[(2\pi-\beta)\tau]}{\cosh[(\pi-\theta)\tau]} P_{-(1/2)+i\tau}(\cosh\alpha) \, d\tau \quad (26)$$

and I quote a Hu equation which is then in exact agreement.

Again, this is the potential of a symmetric metal lens with contact angle θ.

8. Repair of Boeing integral.

I think there is something wrong with Boeing integral p 20 left #6. The main complaint is that it produces a constant term which we know cannot exist, and it also fails on the capacitance test. Integral #5 with cos(ax) looks more promising to me. If I let a = iα, then cos(a) = cos(iα) = ch(α) and I have in mind α = real. We also know that ch(a) = ch(iα) = cos(α). Our condition of interest becomes y > ch(a) or chξ > cos(α) and this will always be true, so I will use the upper form in p 20 left #5. The integral is then, for each of my terms,

$$\pi^{-1} \, 2^{1/2} \, (1/\sqrt{y-\cos\alpha}) \, \tan^{-1}[(\sqrt{y-\cos\alpha} / \sqrt{1+\cos\alpha}] \quad (1)$$

Well I suppose one can say this

$$\tan^{-1}[A/B] = \cot^{-1}[B/A] = \pi/2 - \tan^{-1}[B/A] \quad (2)$$

Then we can rewrite (1) in this way where $A = \sqrt{y-\cos\alpha}$ and $B = \sqrt{1+\cos\alpha}$

$$\pi^{-1} \, 2^{1/2} \, (1/\sqrt{y-\cos\alpha}) \, \{ \pi/2 - \tan^{-1}[B/A]\}$$

$$= 2^{-1/2} \, (1/\sqrt{y-\cos\alpha}) - \pi^{-1} \sqrt{2} \, (1/\sqrt{y-\cos\alpha}) \tan^{-1}[\sqrt{1+\cos\alpha} / \sqrt{y-\cos\alpha}]$$

AND this exactly matches the result of integral #8 EXCEPT for this:

#5 $- \pi^{-1} \sqrt{2}\ (1/\sqrt{y-\cos\alpha}\ ) \tan^{-1}[B/A]$

#6 $- \sqrt{2}\ \pi^{-1}\ \sqrt{y-\cos a}\ \tan^{-1}[B/A]$

So I have discovered a tiny minus sign error in integral #6 !!!

So let's now redo the math above with this repair put in place. I will just copy and paste to below line (well, I did that and have deleted the previous wrong sections)

9. Evaluate the single-bowl integral using correct Boeing integral

For the charged bowl we have

$$V(\xi,u)= V_0 \sqrt{2}\ \sqrt{ch\xi - cosu}\ \int_0^\infty d\tau\ P_{i\tau-1/2}(ch\xi)\ ch[(\pi-u_0)\tau]\ ch[(\pi+u_0-u)\tau] / ch^2(\pi\tau)$$

$$ch[(\pi-u_0)\tau]\ ch[(\pi+u_0-u)\tau]\ = (1/2)\ [\ \cosh(sum)\ + \cosh(diff)\ ]$$

$$= (1/2)\ \{\ \cosh[(2\pi-u)\tau]\ + \cosh[(2u_0-u)\tau]\ \}$$

so we can write our result as two terms

$$V(\xi,u)= (V_0 /\sqrt{2}\ )\ \sqrt{ch\xi - cosu}\ \int_0^\infty d\tau\ P_{i\tau-1/2}(ch\xi)\ \{\ \cosh[(2\pi-u)\tau]\ + \cosh[(2u_0-u)\tau]\} / ch^2(\pi\tau)$$

I have verified on scratch paper that both these two integrals separately converge. Also, if you compare the two boundary conditions, the two cosh terms just switch, so same integral at each BC.

Each integral here has this form

$$\int_0^\infty d\tau\ P_{i\tau-1/2}(ch\xi)\ \cosh[a\tau]\ sech^2(\pi\tau) \qquad \text{condition must be: } |a| < 2\pi \qquad -2\pi < a < 2\pi$$

and amazingly this appears in the **Boeing table page 20, 6th one down**, where the result is given as
[This is now corrected]

$$2^{-1/2} / \sqrt{y-\cos a}\ - \sqrt{2}\ \pi^{-1} / \sqrt{y-\cos a}\ * \tan^{-1}[\ \sqrt{1+\cos a} / \sqrt{y-\cos a}\ ] \qquad y = ch\xi$$

So let's now compute each of these terms. We have

term 1	$a = (2\pi-u)$	$\min = -u_0$	$\max = (2\pi-u_0)$
term 2	$a = (2u_0-u)$	$\min = u_0-2\pi$	$\max = u_0$

$$2^{-1/2}\ / \sqrt{y-\cos(2\pi-u)}\ - \sqrt{2}\ \pi^{-1} / \sqrt{y-\cos(2\pi-u)}\ * \tan^{-1}[\sqrt{1+\cos(2\pi-u)}\ / \sqrt{y-\cos(2\pi-u)}\ ]$$
$$+ 2^{-1/2} / \sqrt{y-\cos(2u_0-u)}\ - \sqrt{2}\ \pi^{-1} / \sqrt{y-\cos(2u_0-u)}\ * \tan^{-1}[\sqrt{1+\cos(2u_0-u)} / \sqrt{y-\cos(2u_0-u)}\ ]$$

$$2^{-1/2} / \sqrt{y-\cos(u)} - \sqrt{2}\ \pi^{-1} / \sqrt{y-\cos(u)} * \tan^{-1}[\sqrt{1+\cos(u)} / \sqrt{y-\cos(u)}\ ]$$
$$+ 2^{-1/2} / \sqrt{y-\cos(2u_0-u)} - \sqrt{2}\ \pi^{-1} / \sqrt{y-\cos(2u_0-u)} * \tan^{-1}[\sqrt{1+\cos(2u_0-u)} / \sqrt{y-\cos(2u_0-u)}\ ]$$

[later I will add phases adjusts to the above terms]

When you set $u = u_0$ you get $\cos(2u_0-u) = \cos(u_0)$ and second line is same as first. There will thus be a $\tan^{-1}$ term in the sum, **so you cannot possibly get just the desired sum of the other two terms. Thus, we have lost our BC!**

But we have $\sqrt{ch\xi - \cos u} = \sqrt{y-\cos(u)}$ outside, so let's multiply this factor in to get

$$2^{-1/2}$$
$$- \sqrt{2}\ \pi^{-1}\ \tan^{-1}[\sqrt{1+\cos(u)} / \sqrt{y-\cos(u)}\ ]$$
$$+2^{-1/2}\sqrt{y-\cos(u)} / \sqrt{y-\cos(2u_0-u)}$$
$$-\sqrt{2}\ \pi^{-1}\sqrt{y-\cos(u)}\ / \sqrt{y-\cos(2u_0-u)}\ \tan^{-1}[\sqrt{1+\cos(2u_0-u)} / \sqrt{y-\cos(2u_0-u)}\ ]$$

So then our potential is $(V_0 / \sqrt{2}\ )$ times the above. Write this out

$$V(\xi,u) = (V_0 / \sqrt{2}\ ) * (T1 + T2 + T3 + T4)$$

$$T1 = 1/\sqrt{2} \qquad (***)$$
$$T2 = - \sqrt{2}\ \pi^{-1} * \tan^{-1}[\sqrt{1+\cos(u)} / \sqrt{ch\xi-\cos(u)}\ ]$$
$$T3 = 2^{-1/2}\sqrt{ch\xi-\cos(u)} / \sqrt{ch\xi-\cos(2u_0-u)}$$
$$T4 = -\sqrt{2}\ \pi^{-1}\sqrt{ch\xi-\cos(u)} / \sqrt{ch\xi-\cos(2u_0-u)}\ * \tan^{-1}[\sqrt{1+\cos(2u_0-u)} / \sqrt{ch\xi-\cos(2u_0-u)}\ ]$$

I did not think it was possible to write a closed form potential for this problem! So far, this is the complete answer and I have taken no limits yet.

Question: Does the above form still meet the boundary conditions?

$u = u_0$:

$$T1 = 1/\sqrt{2}$$
$$T2 = - \sqrt{2}\ \pi^{-1} * \tan^{-1}[\sqrt{1+\cos(u_0)} / \sqrt{ch\xi-\cos(u_0)}\ ]$$
$$T3 = 2^{-1/2}\sqrt{ch\xi-\cos(u_0)} / \sqrt{ch\xi-\cos(u_0)}$$
$$T4 = -\sqrt{2}\ \pi^{-1}\sqrt{ch\xi-\cos(u_0)} / \sqrt{ch\xi-\cos(u_0)}\ * \tan^{-1}[\sqrt{1+\cos(u_0)} / \sqrt{ch\xi-\cos(u_0)}\ ]$$

$$T1 = 1/\sqrt{2}$$
$$T2 = - \sqrt{2}\ \pi^{-1} * \tan^{-1}[\sqrt{1+\cos(u_0)} / \sqrt{ch\xi-\cos(u_0)}\ ]$$
$$T3 = 2^{-1/2}$$
$$T4 = -\sqrt{2}\ \pi^{-1} * \tan^{-1}[\sqrt{1+\cos(u_0)} / \sqrt{ch\xi-\cos(u_0)}\ ]$$

$$\Sigma_T = \sqrt{2} - 2\sqrt{2}\ \pi^{-1} * \tan^{-1}[\sqrt{1+\cos(u_0)}\ /\sqrt{ch\xi-\cos(u_0)}\ ]$$

I have a sign error but only on one term, either T2 or T4. But how can they not both be minus?

This is my earliest sign of trouble! Nothing can be valid below.

10. Take the large r limit of this result

Let's now try to take the large r limit and see what we get. In the large r limit we know that (see toroidals.doc and see above, in this limit both u and ξ are small)

$r \approx 2a/\sqrt{\xi^2+u^2}$ $\quad r \approx \sqrt{2}\ a\ /\ \sqrt{ch\xi - \cos u}$ $\quad$ in the large r limit

$$\sqrt{ch\xi - \cos u} \approx \sqrt{2}\ a/r$$

Term T1 is pretty easy to handle. Term T2 becomes this

$$T2 = -\sqrt{2}\ \pi^{-1} * \tan^{-1}[\sqrt{1+\cos(u)}\ /\sqrt{ch\xi-\cos(u)}\ ]$$

Our limit of interest is $\sqrt{ch\xi-\cos(u)} \rightarrow 0$ which means $r\rightarrow\infty$, so we get $\tan^{-1}[\infty] = \pi/2$.

$$T2 = -\sqrt{2}\ \pi^{-1}\ (\pi/2) = -\ 1/\sqrt{2}$$

and this will exactly cancel T1, hurray ! Next, for T3 I set $u = \xi = 0$ in the denom factor (this is wrong, we need to have $u = 2\pi$ since this is in our allowed range).

$$T3 = 2^{-1/2}\sqrt{ch\xi-\cos(u)}\ /\sqrt{ch\xi-\cos(2u_0-u)} \approx 2^{-1/2}\sqrt{ch\xi-\cos(u)}\ /\sqrt{1-\cos(2u_0)}$$

and this baby is definitely doing 1/r so we are interested in it. Next

$$T4 = -\sqrt{2}\ \pi^{-1}\sqrt{ch\xi-\cos(u)}\ /\ \sqrt{ch\xi-\cos(2u_0-u)}\ \tan^{-1}[\sqrt{1+\cos(2u_0-u)}\ /\sqrt{ch\xi-\cos(2u_0-u)}\ ]$$

Let's take $u = \xi = 0$ and we now have the $\tan^{-1}$ factor to consider. First, here is a little theorem concerning a certain $\tan^{-1}$ form (draw triangle picture)

$$\tan^{-1}[\sqrt{1+\cos(x)}\ /\sqrt{1-\cos(x)}\ ] = \sin^{-1}[\ (\ 1+\cos x)/2\ ]^{1/2} = \sin^{-1}[\ \cos(x/2)]$$

$$= \pi/2 - \cos^{-1}[\ \cos(x/2)] = \pi/2 - x/2$$

We apply this to the $\tan^{-1}$ above first setting $ch\xi = 1$ and $u = 0$ so $x = 2u_0$ and we get

$$\tan^{-1}[\sqrt{1+\cos(2u_0)}\ /\sqrt{1-\cos(2u_0)}\ ] = (\pi/2 - u_0)$$

So we now have

$$T4 = -\sqrt{2}\,\pi^{-1}\sqrt{ch\xi - \cos(u)} \,/\, \sqrt{1-\cos(2u_0)} \;*\; (\pi/2 - u_0)$$

and this is also doing 1/r. So in the large r limit we now have

$$T1 = 1/\sqrt{2}$$
$$T2 = -1/\sqrt{2}$$
$$T3 = 2^{-1/2}\sqrt{ch\xi - \cos(u)} \,/\sqrt{1-\cos(2u_0)}$$
$$T4 = -\sqrt{2}\,\pi^{-1}\sqrt{ch\xi - \cos(u)} \,/\, \sqrt{1-\cos(2u_0)} \;*\; (\pi/2 - u_0)$$

The first term in T4 cancels all of T3, and we now have

$$V(\xi,u) = (V_0 /\sqrt{2}\,) * (\,T1 + T2 + T3 + T4)$$

$$= (V_0 /\sqrt{2}\,) * \sqrt{2}\,\pi^{-1}\sqrt{ch\xi - \cos(u)} \,/\, \sqrt{1-\cos(2u_0)} \;*\; (u_0)$$

Now use our replacement in the limit

$$\sqrt{ch\xi - \cos u} \;\approx \sqrt{2}\; a/r$$

so we then get

$$V(\xi,u) = (V_0 /\sqrt{2}\,) * \sqrt{2}\,\pi^{-1}\{\sqrt{2}\; a/r\,\} / \sqrt{1-\cos(2u_0)} \;*\; (u_0)$$

$$= V_0 \;u_0\; \pi^{-1}\{\sqrt{2}\; a/r\,\} / \sqrt{1-\cos(2u_0)}$$

We can write $\sqrt{1-\cos(2u_0)} = \sqrt{2}\,\sin(u_0)$ to get

$$= V_0 \;u_0\; \pi^{-1}\{\sqrt{2}\; a/r\,\} / \{\sqrt{2}\,\sin(u_0)\}$$

$$= V_0 \;u_0\; \pi^{-1}\{a/r\,\} / \{\sin(u_0)\}$$

We know (scratch) that $C = r\,V(r)/V_0$ where V(r) is our limiting form, so we get

$$C = (a/\pi)\; u_0 /\sin(u_0)$$

Now I know from Smythe that the capacitance of a bowl is this (A is bowl radius)

$$C = (A/\pi)\;\{\pi - \alpha + \sin\alpha\,\}$$

I then have to somehow connect the angle α with the u_0 bowl parameter. Here is a picture showing "both worlds" at the same time:

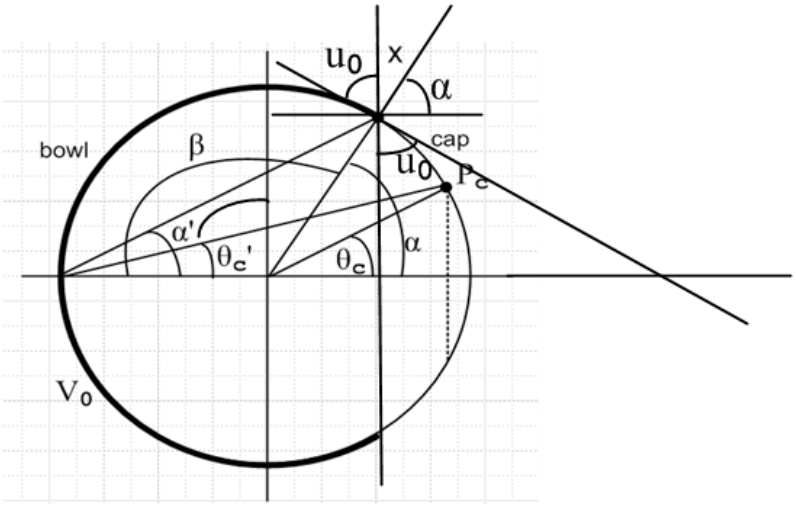

We can see at the top that $u_0 + x = \pi/2$ and also $\alpha + x = \pi/2$ so yes, $\alpha = u_0$! So my answer is then

$$C = (a/\pi)\, u_0 /\sin(u_0) = (a/\pi)\, \alpha /\sin(\alpha)$$

Next we have to relate A to a. Recall that a is the half chord (it must be) so

$$A \sin\alpha = a$$

so my answer is then

$$C =(a/\pi)\, \alpha /\sin(\alpha) = (A \sin\alpha /\pi)\, \alpha /\sin(\alpha) = A\alpha/\pi$$

so here is where we end up

$$C_{me} = A\alpha/\pi$$

$$C_{Smythe} = (A/\pi)\ \{\pi - \alpha + \sin\alpha\} = A - (A\alpha/\pi) + A\sin\alpha/\pi$$

We do not agree! For example, for a full sphere my way shows $u_0 = 0 = \alpha$ so I get $C = 0$!!!

OK, I think I know what has now happened. Instead of setting u and $\xi = 0$, I should have used small approximations for them, and that probably brings out more terms and might fix the result.

---

11. Did I do the large r limit wrong?

So let's go back to our full result before limit:

$$V(\xi,u)= (V_0 /\sqrt{2}\,) * (\, T1 + T2 + T3 + T4)$$

$$T1= 2^{-1/2}$$

$T2 = -\sqrt{2}\ \pi^{-1} * \tan^{-1}[\sqrt{1+\cos(u)}\ /\sqrt{ch\xi-\cos(u)}\ ]$

$T3 = \ 2^{-1/2}\sqrt{ch\xi-\cos(u)}\ /\sqrt{ch\xi-\cos(2u_0-u)}$

$T4 = -\sqrt{2}\ \pi^{-1}\sqrt{ch\xi-\cos(u)}\ /\sqrt{ch\xi-\cos(2u_0-u)}\ * \tan^{-1}[\sqrt{1+\cos(2u_0-u)}\ /\sqrt{ch\xi-\cos(2u_0-u)}\ ]$

and I quote this stuff from toroidal coordinates.doc for limit when both u and ξ are small

$(ch\xi - \cos u) \approx (1/2)(\xi^2+u^2) \qquad \Rightarrow \qquad \sqrt{\xi^2+u^2} \approx \sqrt{2}\ \sqrt{ch\xi - \cos u}$

$r \approx 2a/\sqrt{\xi^2+u^2} \qquad r \approx \sqrt{2}\ a\ /\ \sqrt{ch\xi - \cos u} \qquad \sqrt{ch\xi - \cos u} \approx \sqrt{2}\ a/r$

The main issue here is that we have $\sqrt{ch\xi - \cos u} \rightarrow 0$ as $r\rightarrow\infty$ and we have to be careful. Consider

$\tan^{-1}[\sqrt{1+\cos(u)}\ /\sqrt{ch\xi-\cos(u)}\ ]$

Let's approximate

$\cos(u) \approx 1 - u^2/2$

$(ch\xi - \cos u) \approx (1/2)(\xi^2+u^2)$

Then

$\tan^{-1}[\sqrt{1+\cos(u)}\ /\sqrt{ch\xi-\cos(u)}\ ] =$

$= \tan^{-1}\ [(2-(1/2)u^2)^{1/2}/(\xi^2/2+u^2/2)^{1/2}\ ]$

$= \tan^{-1}\ [2^{1/2}(1-(u/2)^2)^{1/2}/(\xi^2/2+u^2/2)^{1/2}\ ]$

$= \tan^{-1}\ [2(1-u^2/8)\ /(\xi^2+u^2)^{1/2}\ ]$

Now define

$x^2 \equiv \xi^2+u^2$

to get

$= \tan^{-1}\ [2(1-[\ x^2- \xi^2]/8)\ /x]$

$= \tan^{-1}\ [\ (2-[\ x^2- \xi^2]/4)\ /x]$

$= \tan^{-1}\ [\ (2- x^2/4+\xi^2/4)\ /x]$

$= \tan^{-1}\ [\ (2/x- x/4+\xi^2/x\ )\ ]$

No matter how we look at this, the bracket → +∞ just from the first term as x→ 0, and $\tan^{-1}(\infty) = \pi/2$. So I don't think I lost anything out of the T2 term.

12. How does the single-bowl approach a sphere, taking $u_0 \rightarrow 0$?

OK, let's go back to our purported potential

$$V(\xi,u)= V_0 \sqrt{2}\ \sqrt{ch\xi - cosu}\ \int_0^\infty d\tau\ P_{i\tau-1/2}(ch\xi)\ ch[(\pi-u_0)\tau]\ ch[(\pi+u_0-u)\tau] / ch^2(\pi\tau)$$

and take the limit $u_0 \rightarrow 0$ so we are talking a sphere. Then we have

$$V(\xi,u)= V_0 \sqrt{2}\ \sqrt{ch\xi - cosu}\ \int_0^\infty d\tau\ P_{i\tau-1/2}(ch\xi)\ ch[(\pi-u)\tau] / ch(\pi\tau)$$

But this is our "second interesting integral" shown at the end of section 5,

$$\int_0^\infty d\tau\ P_{i\tau-1/2}(ch\xi)\ ch[(\pi-u)\tau] / ch(\pi\tau)\ = 1/\sqrt{2ch\xi - 2cosu}$$

so inserting this gives

$$V(\xi,u)= V_0 \sqrt{2}\ \sqrt{ch\xi - cosu}\ \ 1/\sqrt{2ch\xi - 2cosu}\ = V_0$$????

Have I accidentally done the interior problem ???

OK stop. Look at the picture again:

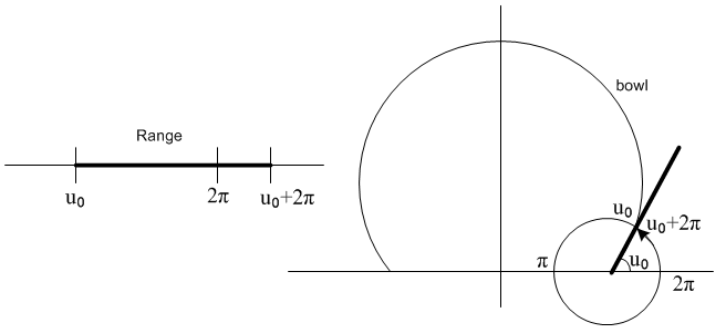

13. How does the single-bowl approach a sphere, taking $u_0 = \varepsilon$ = small but finite.

Let's try again staying away from the actual final limit. We have again,

$$V(\xi,u)= V_0 \sqrt{2}\ \sqrt{ch\xi - cosu}\ \int_0^\infty d\tau\ P_{i\tau-1/2}(ch\xi)\ ch[(\pi-u_0)\tau]\ ch[(\pi+u_0-u)\tau] / ch^2(\pi\tau)$$

and let's set $u_0 = \varepsilon$, a very small but finite value. Then it is not clear how to do this integral. But we did it above and we got this closed-form analytic result,

$$V(\xi,u)= (V_0 /\sqrt{2}\,) * (\,T1 + T2 + T3 + T4)$$

$$T1= 1/\sqrt{2}$$
$$T2= -\sqrt{2}\;\pi^{-1} * \tan^{-1}[\sqrt{1+\cos(u)}\,/\sqrt{ch\xi-\cos(u)}\;\,]$$
$$T3 = \;\; 2^{-1/2}\sqrt{ch\xi-\cos(u)}\,/\sqrt{ch\xi-\cos(2\varepsilon-u)}$$
$$T4 = -\sqrt{2}\,\pi^{-1}\sqrt{ch\xi-\cos(u)}\,/\sqrt{ch\xi-\cos(2\varepsilon-u)}\;\, * \tan^{-1}[\sqrt{1+\cos(2\varepsilon-u)}\,/\sqrt{ch\xi-\cos(2\varepsilon-u)}\;\,]$$

I am no longer interested in the large r limit. I want ξ and u finite numbers, and $\varepsilon\to 0$. Consider then

$$A \pm \cos(2\varepsilon-u) \;= A \pm \cos(2\varepsilon)\cos(u) \pm \sin(2\varepsilon)\sin(u) \;\approx\; A \pm \cos u \pm 2\varepsilon \sin u \qquad \text{// first order in } \varepsilon$$

$$[A \pm \cos(2\varepsilon-u)]^{1/2} \;\approx\; [A \pm \cos u \pm 2 \sin u\, \varepsilon]^{1/2} \;\approx\; (A \pm \cos u)^{1/2} \;\pm (1/2)\, 2 \sin u\, \varepsilon (A \pm \cos u)^{-1/2}$$

$$= \;\sqrt{A\pm\cos u} \;\pm A\sin u/\sqrt{A\pm\cos u} * \varepsilon \qquad \text{// first order in } \varepsilon$$

$$= \sqrt{A\pm\cos u}\;\;(\;1\;\pm A\sin u/(A\pm\cos u) * \varepsilon\;)$$

Then we can say

$$\sqrt{A-\cos(u)}\,/\sqrt{A-\cos(2\varepsilon-u)} \;\; = \;\sqrt{A-\cos(u)}\;\,/\;\{\sqrt{A-\cos u}\;\;(\;1\;\; - A\sin u/(A-\cos u) * \varepsilon\;)\}$$

$$= 1/(\;1\;\; - A\sin u/(A-\cos u) * \varepsilon\;) \;\approx\; 1 + A\sin u/(A-\cos u) * \varepsilon \qquad \text{// first order in } \varepsilon$$

So applying this to T3 above we get

$$T3 = \;\; 2^{-1/2}\sqrt{ch\xi-\cos(u)}\,/\sqrt{ch\xi-\cos(2\varepsilon-u)}$$

$$\approx 2^{-1/2}\,[1 + ch\xi\, \sin u/(ch\xi-\cos u) * \varepsilon\,]$$

This is interesting because we might want to through out this ε term, but it has a coefficient which blows up in our large r limit. Hmmm. This same ratio appears in T4. So now let's look at the $\tan^{-1}$ factor for small ε.

$$\tan^{-1}[\sqrt{1+\cos(2\varepsilon-u)}\,/\sqrt{ch\xi-\cos(2\varepsilon-u)}\,]$$

We can approximate the top and bottom using our rule above

$$\sqrt{1+\cos(2\varepsilon-u)} \;\approx\; \sqrt{1+\cos u}\;\;(\;1\;\; + \sin u/(1+\cos u) * \varepsilon\;)$$

$$\sqrt{ch\xi-\cos(2\varepsilon-u)} \;\approx\; \sqrt{ch\xi-\cos u}\;\;(\;1\;\; - A\sin u/(ch\xi-\cos u) * \varepsilon\;)$$

Then our ratio is this

$$\sqrt{1+\cos(2\varepsilon-u)}\,/\sqrt{ch\xi-\cos(2\varepsilon-u)}$$

$$\approx \sqrt{1+\cos u}\ (\ 1\ +\sin u/(1+\cos u)\ *\ \varepsilon\ )\ /\ \{\sqrt{ch\xi-\cos u}\ (\ 1\ -\ A\sin u/(ch\xi-\cos u)\ *\ \varepsilon\ )\}$$

$$=(\sqrt{1+\cos u}\,/\sqrt{ch\xi-\cos u}\,)(\ 1\ +\sin u/(1+\cos u)\ *\ \varepsilon)\ (\ 1\ +\ ch\xi\ \sin u/(ch\xi-\cos u)\ *\ \varepsilon\ )$$

$$\approx (\sqrt{1+\cos u}\,/\sqrt{ch\xi-\cos u}\,)\ (\ \ 1\ +\ \{\ [\sin u/(1+\cos u)]\ +\ [ch\xi\ \sin u/(ch\xi-\cos u)]\ \ \}\ \varepsilon\ \ )\ \ //\ \text{first order}\ \varepsilon$$

$$\approx\ F\ (\ 1\ +\ G\varepsilon)$$

So we then want

$$\tan^{-1}[F\ (\ 1\ +\ G\varepsilon)]\ \approx\ \tan^{-1}(F)\ +\ FG\varepsilon\ \ [\partial_{\mathbf{x}}\tan^{-1}(x)]^{|\mathbf{x=F}}$$

$$\approx\ \tan^{-1}(F)\ +\ FG\varepsilon\ (1/(1+x^{2})^{|\mathbf{x=F}}$$

$$\approx\ \tan^{-1}(F)\ +\ FG\varepsilon\ /(1+F^{2})$$

It is a bit messy. We have

$$FG\ =(\sqrt{1+\cos u}\,/\sqrt{ch\xi-\cos u}\,)\{\ [\sin u/(1+\cos u)]\ +\ [ch\xi\ \sin u/(ch\xi-\cos u)]\ \ \}$$

$$(1+F^{2})\ =\ 1\ +\ (\sqrt{1+\cos u}\,/\sqrt{ch\xi-\cos u}\,)^{2}$$

Multiply top and bottom by $(\sqrt{ch\xi-\cos u}\,)^{2}$ to get

$$FG'\ =(\sqrt{1+\cos u}\,/\sqrt{ch\xi-\cos u}\,)\{\ [(ch\xi-\cos u)\ \sin u/(1+\cos u)]\ +\ ch\xi\ \sin u\ \}$$

$$(1+F^{2})'\ =\ (ch\xi-\cos u)\ +\ (1+\cos u)\ \ =\ ch\xi\ +\ 1$$

So we have at this point

$$\tan^{-1}[\sqrt{1+\cos(2\varepsilon-u)}\,/\sqrt{ch\xi-\cos(2\varepsilon-u)}\,]\ \approx\ \tan^{-1}(F)\ +\ [FG'\ /(1+F^{2})']\varepsilon$$

Now finally we can write out T4 in our small ε approximation

$$T4\ =\ -\sqrt{2}\ \pi^{-1}\sqrt{ch\xi-\cos(u)}\,/\sqrt{ch\xi-\cos(2\varepsilon-u)}\ \ *\ \tan^{-1}[\sqrt{1+\cos(2\varepsilon-u)}\,/\sqrt{ch\xi-\cos(2\varepsilon-u)}\ \ ]$$

$$\approx\ -\sqrt{2}\ \pi^{-1}\ \{1\ +\ ch\xi\ \sin u/(ch\xi-\cos u)\ *\ \varepsilon\ \}\{\ \tan^{-1}(F)\ +\ [FG'\ /(1+F^{2})']\varepsilon\ \}$$

$$\approx -\sqrt{2}\ \pi^{-1}\ \{\ \tan^{-1}(F)\ +\ [\ \ \tan^{-1}(F)\ ch\xi\ \sin u/(ch\xi-\cos u)\ +\ \ \ [FG'\ /(1+F^{2})']\ ]\ \varepsilon\ \}$$

We can now summarize our result in the case u_0= ε is very small:

$V(\xi,u)= (V_0 /\sqrt{2}) * (T1 + T2 + T3 + T4)$

$T1= 1/\sqrt{2}$
$T2= - \sqrt{2}\ \pi^{-1} * \tan^{-1}[\sqrt{1+\cos(u)} /\sqrt{ch\xi-\cos(u)}\ ]$
$T3 = \ 2^{-1/2} [1 + ch\xi \sin u/(ch\xi-\cos u) * \varepsilon]$
$T4 =-\sqrt{2}\ \pi^{-1} \{ \tan^{-1}(F) + [\ \tan^{-1}(F)\ ch\xi \sin u/(ch\xi-\cos u) + \ [FG' /(1+F^2)']] \varepsilon \}$

$F = (\sqrt{1+\cos u} /\sqrt{ch\xi-\cos u})$

$FG' = (\sqrt{1+\cos u} /\sqrt{ch\xi-\cos u})\{ [(ch\xi-\cos u) \sin u/(1+\cos u)] + ch\xi \sin u \}$

$(1+F^2)' = (ch\xi-\cos u) + (1+\cos u)$

$r^2 = a^2 (sh^2\xi + \sin^2 u)/(ch\xi - \cos u)^2 \qquad a = R\varepsilon$
$= R^2\varepsilon^2 (sh^2\xi + \sin^2 u)/(ch\xi - \cos u)^2$

$r = R\varepsilon \sqrt{sh^2\xi + \sin^2 u} / |ch\xi-\cos u|$

Now holding ε small but finite, what happens NOW if we go far away, so $ch\xi-\cos u \rightarrow 0$. We get

$F = +\infty \qquad \tan^{-1}(F) = \pi/2$

$FG' = (\sqrt{1+\cos u} /\sqrt{ch\xi-\cos u})\ ch\xi \sin u$ = blows up

$(1+F^2)' = (1+\cos u)$

$T1= 1/\sqrt{2}$
$T2= - \sqrt{2}\ \pi^{-1} *(\pi/2)$
$T3 = \ 2^{-1/2} [1 + ch\xi \sin u/(ch\xi-\cos u) * \varepsilon]$
$T4 =-\sqrt{2}\ \pi^{-1} \{ (\pi/2) + [\ (\pi/2)\ ch\xi \sin u/(ch\xi-\cos u) + \ [(\sqrt{1+\cos u} /\sqrt{ch\xi-\cos u})\ ch\xi \sin u /(1+\cos u)]] \varepsilon \}$

T1 cancels T2, and the second term in T3 cancels the second term in T4, and the first term in T3 cancels the first term in T4, and we are left only with the last term in T4 so we have

$V(\xi,u)= (V_0 /\sqrt{2}) (-\sqrt{2}\ \pi^{-1}) [(\sqrt{1+\cos u} /\sqrt{ch\xi-\cos u})\ ch\xi \sin u /(1+\cos u)]] \varepsilon$

$= - (V_0 /\pi) [ch\xi \sin u /[\sqrt{1+\cos u}\ \sqrt{ch\xi-\cos u}\ ]] \varepsilon$

Meanwhile recall that

$r \approx \sqrt{2}\ a / \sqrt{ch\xi - \cos u} = \sqrt{2}\ u_0 / \sqrt{ch\xi - \cos u} = \sqrt{2}\ \varepsilon / \sqrt{ch\xi - \cos u}$

So we then have

$$= - (V_0 /\sqrt{2}\,\pi) [ch\xi\ sinu /\sqrt{1+cosu}\ ] (\sqrt{2}\,\varepsilon/\sqrt{ch\xi - cosu}\ ) =$$

$$= - (V_0 /\sqrt{2}\,\pi) [ch\xi\ sinu /\sqrt{1+cosu}\ ]r =$$

OK, this is all total garbage 2:30 PM Sunday 1.23.11, I am now suffering a lot.

Local definition: **lune** = that thin 3D object formed from two bowls of nearly the same u.

Comment: Think of the lune object as representing the charged bowl. The exterior region is everywhere outside the lune, and this includes everywhere both inside and outside of the sphere on which our lune lies. This is one continuous region and everywhere it is in theory described by our potential.

Imagine that we make the bowl hole fairly small. Now what happens as you try taking the limit that the lune closes on itself? Then we end up two separate regions, the "exterior" to the lune becomes disjoint. Which region does our potential describe, if either.