Problem 38: Overview of Work Done (Iris Stuff) PhL 7.6.10

Overview (1 page, written 12.6.10) **1**
1. Statement of the Problem. **2**
2. My Successful Though Complicated Solution **2**
3. Three attempts at Problem 38 using "the Dirichlet method" **4**
4. An attempt by the "partial eigenfunction method". **5**
5. The right way to do this problem. **6**
6. The general method using oblates **6**

Overview (1 page, written 12.6.10)

In **Section 1** I just state the iris Green's Function problem which I noted in Smythe as Problem 38.

I think **my path to the iris problem** was this: (1) In Oct 2009, after doing the Stak "integral equation method" for a charged sphere, I tried applying the same method to the charged *half*-sphere and quickly got myself into a world of trouble, see "potential of half-spherical shell v1.doc" in the bowl folder. (2) Perhaps on a charged-bowl suggestion by Jim, I looked into Jackson's inversion stuff starting Nov 2009. (3) I thought my half-sphere bowl might be the inversion of an iris, so that got me interested in the iris (and disk) as potentially *simpler* problems, better places to start, 2D like. (4) I got Smythe's book in Nov 2009, and probably scanned it for "hole in plate" and this led to the discovery of Problem 38 with its tantalizingly simple result for σ for the iris Green's. So as the next section tells, about 7 months went by before I found a solution to Problem 38!

In **Section 2** I review my "hard way solution" of Problem 38 of **invert-rotate-invert** and discuss the documentation trail which that long effort created. This work was done in the first half of June 2010.

In **Section 3**, I review a triplet of *earlier* docs which live in the iris folder, written in the last 3 days of April 2010. These arose after I wrote my little "**Dirichlet method** for Green's functions" and I was then trying to apply this Dirichlet method to the iris (called problem #5 at one time). I kept getting dead-ended in a pair of dual integral equations whose solution I could not "find" anywhere. But I did notice the Sneddon reference in Jackson which led me to read that book, so I could now doubtless solve this problem directly by the dual integral equation method. It would give the Green's function as some dk integral which I would then have to fiddle with (perhaps a multiple integral).

In **Section 4**, in the same time frame and folder with the above triplet, I try to find the iris Green's function uses Stakgold's **partial eigenfunction method**, where we try to get things down to an ODE in one variable. I discover that the mixed boundary conditions prevent me from implementing this method.

In **Section 5** I review what I call "the right way" to do this problem which is **disk-disk inversion**, and I quote the result for Φ. This method was found (by me) in July 2010. I have never seen my Φ result quoted anywhere, but I am sure it is right. I still have not found a collection of all canonical electrostatics

solutions, but maybe my canonical doc will have something or will have a reference. You would think the Russians would have some kind of handbook on this.

In **Section 6** I recall that this iris problem has a solution in **oblates**, but in this solution both Φ and σ appear as messy series of Q functions and are thus more complex than the Section 5 results. I note now that the oblate solution for the *disk* Green's problem is a similar mess. This oblate work was done back in Jan and Feb of 2010.

---

1. Statement of the Problem.

Problem 38: Find the Green's Function for, and find σ on, an **iris with a point charge in the hole**.

Actually the problem only asks for σ, but I extended it to find the potential as well. Here is Smythe's statement of the problem.

> **38.** A charge q is at a distance b from the center of a circular hole of radius a in an infinite earthed flat conducting sheet and lies in the same plane. Show that the charge density induced on the sheet at a distance r from the charge and c from the center of the hole is $-q(a^2 - b^2)^{\frac{1}{2}}/[2\pi^2 r^2 (c^2 - a^2)^{\frac{1}{2}}]$.

2. My Successful Though Complicated Solution

I did not realize until 7.5.10 that you can do this problem by a simple direct inversion between the charged disk and the iris + charge in hole (see section 5 below). For some reason, I felt that the only workable inversion you could do was plane to sphere. So using that idea, I came up with the following very complicated way to solve this problem:

(1) Invert a charged disk to find the Green's function of a tilted bowl with point charge at the inversion origin (which is an arbitrary point on the cap): (I called this "the first inversion")

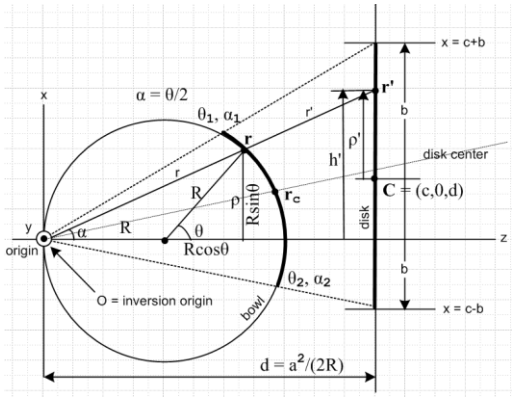

(2) Rotate the bowl (and its charge and potential) in the above picture so it is centered on the inversion origin. In this situation, the inversion of the bowl + charge on cap becomes an iris + charge in hole, and this is the problem of interest. (I call this the "second inversion")

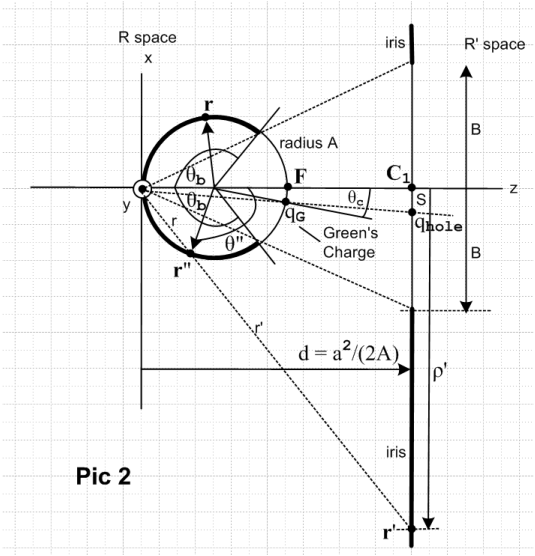

Pic 2

(3) Do the second inversion using the above picture and obtain the desired results.

(4) Statement of Results: Since the iris ended up in R'-space of the second inversion, I obtained results in terms of primed coordinates. Here was the result:

$$\Phi_{iris}(\mathbf{r}') = (2q_1/\pi r_1)\cos^{-1}\left[(Br_1\sqrt{2}) * \right.$$

$$\left. 1/\sqrt{(\rho'^2+Z_i^2)(S^2-B^2) + B^2(B^2- S^2 + 2r_1^2) + (B^2- S^2)\sqrt{[(\rho'-B)^2+Z_i^2]\,[(\rho'+B)^2+Z_i^2]}}\ \right]$$

where $r_1^2 = (\rho'^2 + S^2 + Z_i^2 + 2S\rho'\cos\varphi)$

$$\sigma_{iris}(\mathbf{r}') = (2q_1/\pi r_1^2)\sqrt{B^2-S^2} / \sqrt{\rho'^2 - B^2}\ ] \quad \text{where } r_1^2 = (\rho'^2 + S^2 + 2S\rho'\cos\varphi)$$

where it is this σ_{iris} result that Smythe asks us to find in Problem 38. These results are expressed in cylindrical coordinates for the iris, with origin at the center of the iris. The azimuthal angle φ is measured from a point opposite the point charge in the hole. The hole has radius B and the charge is distance S from hole center. Z_i is just the z coordinate, I guess i was for "iris".

(5) Documentation. After endless problems and confusions, I summarized my concluded work in these documents; pictures are in a "method of inversion support.vsd" perhaps in a different folder.

0. Top level review of Smythe inversion bowl.doc
1. Parameter facts for Pic 1 and Pic 2.doc
2, How to Actively Rotate the Bowl.doc
3. Doing the Second Inversion.doc
4. Plots.doc

Detail work done before the above docs were written appears in these files:

Smythe Problem 38 by Double Inversion Attempt #1.doc
Smythe Problem 38 by Double Inversion Attempt #2.doc
Smythe Problem 38 by Double Inversion Attempt #2A.doc
Smythe Problem 38 by Double Inversion Attempt #3.doc
Smythe Problem 38 by Double Inversion Attempt #4.doc

Everything in all these files is reviewed in File 0 listed above, "top level review".

The next two sections concern files that are in the "iris" folder:

3. Three attempts at Problem 38 using "the Dirichlet method"

My files for these attempts (called Attempt#1,2,3, do not confuse with the above) are all contained in folder electrostatics/iris. A summary of my efforts there is presented there in "meta review of 3 iris attempts in this folder.doc". I give a brief review right now:

On 4.23.10 I went off and wrote "Finding Green's Functions by the Dirichlet Method.doc" (Stak folder) in which I describe an obvious method of finding Green's functions:

(1) compute the potential the point charge would have on the V=0 surface if it were just a math surface.
(2) solve the Dirichlet problem using, as the boundary value potential on that math surface, the negative of result (1). The solution of (2) can be regarded as the potential due just to the induced charge on the surface of the Green's problem solution.
(3) add back the potential of the point charge, you then get V = 0 on the surface, and then the sum of the point charge potential plus the Dirichlet problem potential should be the desired Green's function.

I applied this method to four situations, and situation #5 was to be the iris. Knowing this would be messy, I started a new document, which became the series of "attempt" documents below.

Attempt #1: The obvious Smythian form for the iris plus the above Dirichlet method leads to a pair of dual integral equations, which I was unable to solve (RHS of first is the Dirichlet -q/R thing)

(1) $\Sigma_{m=0}^{\infty} \cos(m\theta) \int_0^{\infty} dk\, A_m(k)\, J_m(k\rho) = -q/\sqrt{b^2 + \rho^2 - 2c\rho\cos\theta}$ $\qquad \rho \geq a$

(2) $\Sigma_{m=0}^{\infty} \cos(m\theta) \int_0^{\infty} dk\, k\, A_m(k)\, J_m(k\rho) = 0$ $\qquad 0 < \rho < a$

The fact that the iris **has a "hole"** makes the Dirichlet condition (1) be only *partial* in the range of ρ, and that of course prevents the use of J_m orthogonality to solve for the A_m. Then (2) is the statement that there is no σ inside the hole. If the radical is expanded in partial waves, we get these simpler equations

(1) $\int_0^{\infty} dk\, A_m(k)\, J_m(k\rho) = (-q/2)\, \varepsilon_m a_m(\alpha,\beta)$ $\qquad \rho \geq a$ $\qquad \alpha = b^2+\rho^2 \quad \beta = 2c\rho$

(2) $\int_0^{\infty} dk\, k\, A_m(k)\, J_m(k\rho) = 0$ $\qquad 0 < \rho < a$ $\qquad b^2 = c^2 + d^2$

$$a_m(\alpha,\beta) = (2/\pi)(1/\sqrt{b\rho})\, Q_{m-1/2}\left[(\rho^2+b^2)/(2b\rho)\right]$$

This is a classic "mixed boundary condition" problem which I could not begin to solve. Along the way I did learn this new integral, derived in Appendix A of attempt #1 :

$$\int_0^\infty dk\ J_m(\rho k)\, J_m(axk) = (1/\pi)\,(\rho ax)^{-1/2} Q_{m-1/2}[\,(ax/2\rho) + (\rho/2ax)]$$

[I think I could solve these dual integral equations now, having read Sneddon.]

Attempt #2: This entire doc was founded on a bad assumption and should be ignored.

Attempt #3: In Section 1 I clean up attempt #1, nothing new. I then tried to apply Jackson's green and red dual integral equation forms, but neither fit this case, but I did learn from red Jackson about this book

> *One monograph, I. N. Sneddon, *Mixed Boundary Value Problems in Potential Theory*, North-Holland, Amsterdam, and Wiley-Interscience, New York (1966), is devoted to our subject. See also *Tranter* (Chapter VIII).

which is very expensive on Amazon and cannot be downloaded anywhere, a mere 283 pages. The Scottish author died in 2000. [I now have a copy of this book, I have read it all, and I could probably now solve the above dual integral equations, but have not done so.]

After much wheel spinning, I then try a 1/R expansion in I K functions and I can then write the above this way

$$(1)\quad \int_0^\infty dk\ A_m(k)\, J_m(k\rho) = -(2q\varepsilon_m/\pi) \int_0^\infty dk \cos[kd]\, I_m(kc)\, K_m(k\rho) \qquad \rho > a$$

$$(2)\quad \int_0^\infty dk\ k\, A_m(k)\, J_m(k\rho) = 0 \qquad \rho < a$$

and this leads me do the following integral, which is an interesting connection between the Bessel and Legendre worlds, similar to the one shown above:

$$\int_0^\infty dk \cos[kd]\, I_m(kc)\, K_m(k\rho) = (1/2)\, 1/\sqrt{c\rho}\ Q_{m-1/2}\,[(\rho^2 + c^2 + d^2)/(2c\rho)]$$

But I still (at the time) have no idea how to actually solve such a pair of equations, so end of discussion of these three "attempt" docs in the iris folder.

4. An attempt by the "partial eigenfunction method".

In this separate doc (it has a summary) I first derive a 1/R expansion in Bessel functions for the point charge, and I in fact do this in complete detail using this partial eigenfunction method of Stak. I get

$$1/R = 1/|\mathbf{r} - \mathbf{r}'| = \Sigma_{m=0}^{\infty}\, \varepsilon_m \int_0^\infty dk\ J_m(k\rho)\, J_m(k\rho')\, e^{-k|z-z'|} \cos[m(\varphi-\varphi')]$$

But when I then try to apply this exact same method to the iris, the required BC's entangle more than one variable and I cannot solve the problem. Here is an entanglement between z and ρ, for example,

$$\nabla^2 g(\rho,\varphi,z;\, \rho',\varphi',z') \;=\; -\,4\pi\,\delta(z-z')\,\delta(\varphi-\varphi')\,\delta(\rho-\rho')/\rho$$

$$g(z=0) = 0 \qquad \text{for } \rho > a$$

$$\partial_{\mathbf{z}} g(z=0+) = \partial_{\mathbf{z}} g(z=0-) \qquad \text{for } \rho < a$$

This is really just a restatement of the mixed boundary conditions.

5. The right way to do this problem.

As noted above, I did not realize this until a chance reading in early July of a pdf by Kirk of Princeton, who was reviewing charged bowl methods. I wrote a little about this in inversion/doing the disk by inversion.doc. Here is the inversion picture, and this picture stays all. The inversion of a simple charged disk IS the iris with point charge in hole problem:

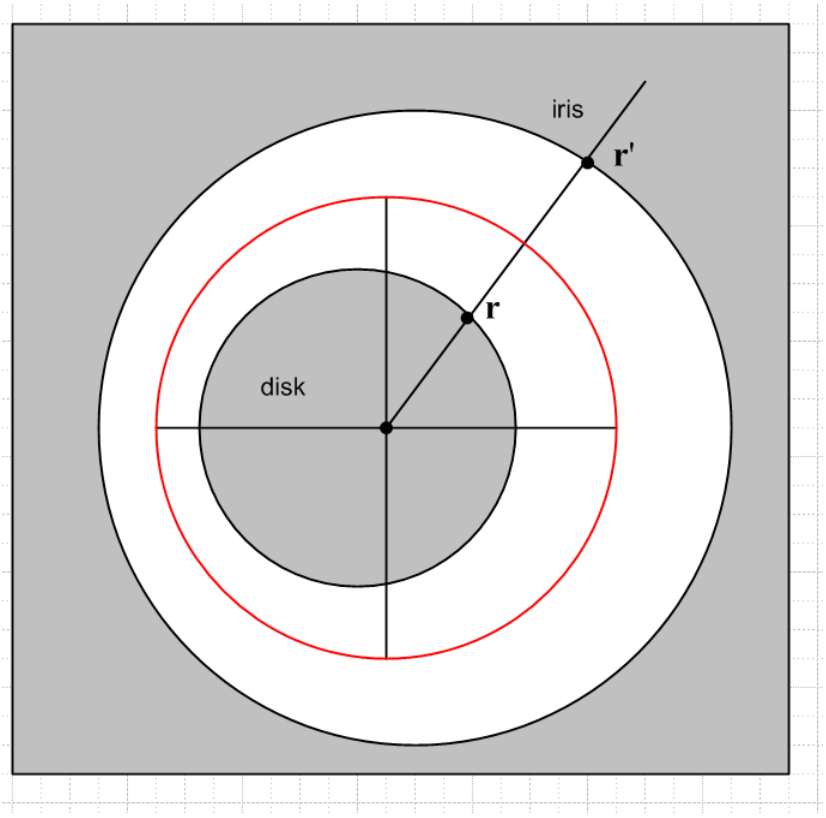

I have not carried out this inversion calculation since I have the complete results already, but if I were doing it again, or teaching it in a class, I would do it using this simple picture. [I have since done this solution in "iris by inversion, Problem 38 the easy way.doc" , iris folder.]

6. The general method using oblates

Let's not forget that we know the Green's function for an iris for ANY placement of the point charge. This comes from doing the Green's function of a hyperboloid, then letting that thing go to an iris in the limit.

Here we are in oblate spheroidal coordinates involving P and Q functions, and even when you take the limit of iris and point charge in hole, you get a very messy answer for the σ on the iris and Φ everywhere, but somehow these must be the same as the results obtained by inversion. This method and results are discussed in the Green's for Oblate Hyperboloid folder.