Jackson method of inversion formulas PhL 7.7.10

Here I just want to summarize the "formulas" and "main facts" one needs to do an inversion problem between R space and R' space. The main point of inversion is this: if you set up two spaces R and R' which are related by inversion, then the potentials and charged densities in the two spaces will be related by certain simple rules. If you now everything in one space, you can use these rules to then know about everything in the other space.

Overview: none needed for this 7 page doc, it is just the collection of facts shown below.

(1) Inversion takes place "through" a circle of radius "a" **1**

(2) Point charges in the two spaces are related **1**

(3) Potentials in the two spaces are related **1**

Corollary 1: The Metal Theorem. 2

Corollary 2: A constant potential V 2

(4) Distances in the two spaces are related **2**

(5) Charge densities in the two spaces are related **3**

(6) Spheres into spheres. **3**

(7) Circles into circles **3**

(8) The Sphere-Plane mapping. **4**

(9) The Side-by-Side Sphere-Sphere Mapping. **5**

(10) The One-inside-the-Other Sphere-Sphere Mapping. **6**

(1) Inversion takes place "through" a circle of radius "a" centered at the "inversion origin"**.** All coordinates appearing below are **Cartesian coordinates relative to this inversion origin**.

(2) Point charges in the two spaces are related in the following equivalent ways (q is at **r**, q' at **r'**) :

$q' = (a/r)\, q = (r'/a)q$ // left is Jackson p 35 (2.18)

$q = (r/a)\, q' = (a/r')q'$

where $\mathbf{r'} = (a^2/r^2)\mathbf{r}$ which implies $r' = a^2/r$ so that $(r'/a) = (a/r)$

(3) Potentials in the two spaces are related in the following equivalent ways :

$\Phi'(\mathbf{r}) = (a/r)\, \Phi(\mathbf{r'}) = (r'/a)\, \Phi(\mathbf{r'})$ // left is Jackson p 35 (2.17) and most useful

$\Phi(\mathbf{r}) = (a/r)\, \Phi'(\mathbf{r'}) = (r'/a)\, \Phi'(\mathbf{r'})$

$\Phi'(\mathbf{r'}) = (a/r')\, \Phi(\mathbf{r}) = (r/a)\, \Phi(\mathbf{r})$

$\Phi(\mathbf{r'}) = (a/r')\,\Phi'(\mathbf{r}) = (r/a)\,\Phi'(\mathbf{r})$

where

$\mathbf{r'} = (a^2/r^2)\mathbf{r}$ which implies $r' = a^2/r$ so that $(r'/a) = (a/r)$

If you start with the upper left form, you get to the others by doing $\mathbf{r} \leftrightarrow \mathbf{r'}$ (and of course $r \leftrightarrow r'$). If you are "given" a situation in R' space and you want to learn about the corresponding situation in R space, the form you usually use is the top left one. The game is then to use $\mathbf{r'} = (a^2/r^2)\mathbf{r}$ to get everything expressed in R space coordinates. There are also R' space "parameters" that have to get replaced by R space parameters so you end up with a solution in R space that only references R space "things".

Corollary 1: The Metal Theorem. If $\Phi = 0$ on some surface in R space, then $\Phi' = 0$ on the mapping of that surface in R' space. This means that both such surfaces can be made of metal (conductor).

Corollary 2: A constant potential V in one space maps to a point charge of size q=aV in the other space and located at the inversion origin. This can be seen from $\Phi(\mathbf{r}) = (a/r)\,\Phi'(\mathbf{r'}) = (aV)/r = q/r$. In the other direction, the becomes $\Phi'(\mathbf{r'}) = (a/r')\,\Phi(\mathbf{r}) = (aV/r')$.

(4) Distances in the two spaces are related in the following equivalent ways :

$|\mathbf{r'}_1 - \mathbf{r'}_2| \,/\, |\mathbf{r}_1 - \mathbf{r}_2| = (r_2'/r_1) = (r_1'/r_2)$ " primed over unprimed"

where

$\mathbf{r}_1' = (a^2/r_1^2)\mathbf{r}_1$ which implies $r_1' = a^2/r_1$ so that $(r_1'/a) = (a/r_1)$
$\mathbf{r}_2' = (a^2/r_2^2)\mathbf{r}_2$ which implies $r_2' = a^2/r_2$ so that $(r_2'/a) = (a/r_2)$

That is to say, this is true if both pairs of points $(\mathbf{r}_1, \mathbf{r}_1')$ and $(\mathbf{r}_2, \mathbf{r}_2')$ are mapping pairs.

Warning: Below we shall see how sphere (R,**c**) maps into sphere (R',**c'**). Under this mapping, the center point **c** does NOT map into center point **c'**, and $c' \neq a^2/c$ (rather, $c' = \beta c$). Therefore, (**c**,**c'**) do NOT form a mapping pair, so you canNOT apply the above distance ratio formula where (**c**,**c'**) is one point pair. Here is an illustration showing that center **c** in fact maps into some interior point in the R' sphere (red dots). The concentric spheres on the left are mapped into the non-concentric spheres on the right.

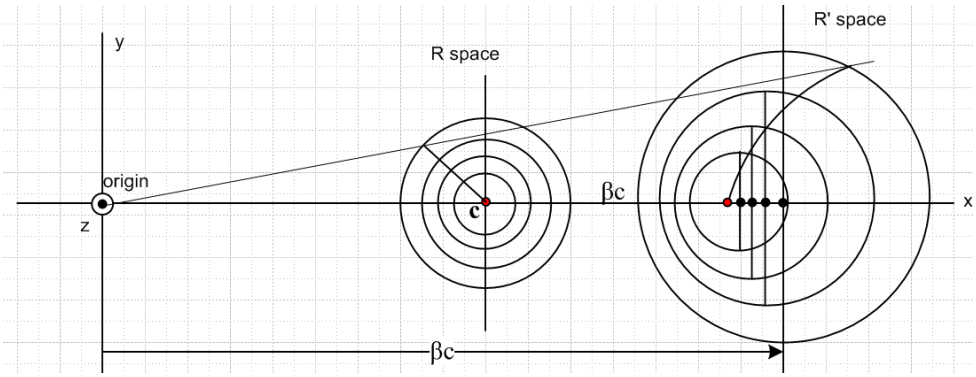

(5) Charge densities in the two spaces are related in the following equivalent ways : **(** Charge densities are related by formulas exactly like those above for the potential, except the power of the ratio shown, which is 1 for the potential, is 3 for σ and 5 for ρ.)

$\sigma'(\mathbf{r}) = (a/r)^3\, \sigma(\mathbf{r'}) = (r'/a)^3\, \sigma(\mathbf{r'})$ // left is Jackson p 35 (2.17) and most useful

$\sigma(\mathbf{r}) = (a/r)^3\, \sigma'(\mathbf{r'}) = (r'/a)^3\, \sigma'(\mathbf{r'})$

$\sigma'(\mathbf{r'}) = (a/r')^3\, \sigma(\mathbf{r}) = (r/a)^3\, \sigma(\mathbf{r})$

$\sigma(\mathbf{r'}) = (a/r')^3\, \sigma'(\mathbf{r}) = (r/a)^3\, \sigma'(\mathbf{r})$

and similarly for ρ if we replace 3 by 5 everywhere, and σ by ρ everywhere.

(6) Spheres into spheres. Inversion always maps a sphere into a sphere, if you include a plane as a limiting case of a sphere (ie, radius = ∞)

$|\mathbf{r} - \mathbf{c}| = R \quad \Rightarrow \quad |\mathbf{r'} - \mathbf{c'}| = R'$

where $\mathbf{c'} = \beta\mathbf{c}$ and $R' = |\beta| R$ where $\beta = a^2/(c^2 - R^2)$

or

$|\mathbf{r'} - \mathbf{c'}| = R' \quad \Rightarrow \quad |\mathbf{r} - \mathbf{c}| = R$

where $\mathbf{c} = \beta'\mathbf{c'}$ and $R = |\beta'| R'$ where $\beta' = a^2/(c'^2 - R'^2)$

The sphere centers lie on the same line drawn to the inversion origin. Note that $|\beta|\ |\beta'| = 1$.

(7) Circles into circles. In my Jackson notes, I prove a Circle Theorem which says that a circular locus in R space maps into a circular locus in R' space. I did not attempt to derive a relation between the radii of these two circles. Here is a picture which goes with this theorem:

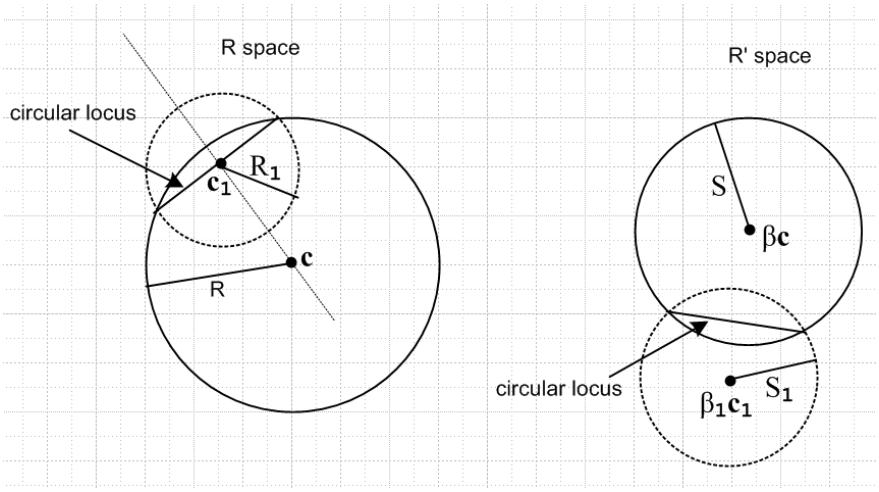

You can see that the radius of the R space circle is R_1, but in R' space the radius of the corresponding circle there is "not obvious". Similarly, the relation between the normal vectors to the two circles is not obvious, but of course both items could be calculated.

(8) The Sphere-Plane mapping. This is one of the "canonical" inversion mappings, and we observe it from a viewpoint where we see the plane edge on:

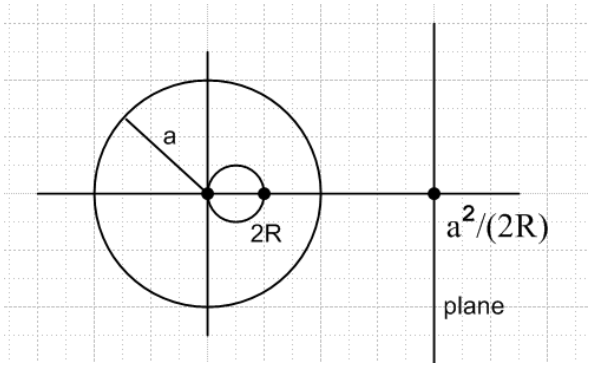

The plane is located distance $d = a^2/(2R)$ to the right of the inversion center. This mapping takes either a disk or iris on the plane into a spherical bowl on the small sphere of radius R. The picture shows the case that $a > 2R$. When $a < 2R$, the plane moves inside the R space sphere. Here are three pictures showing this motion, and showing how a disk in R' space maps to a spherical bowl in R space:

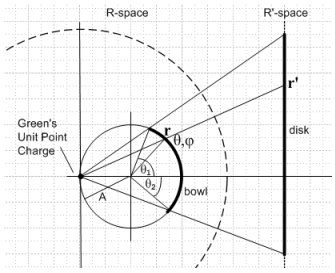

a > 2R

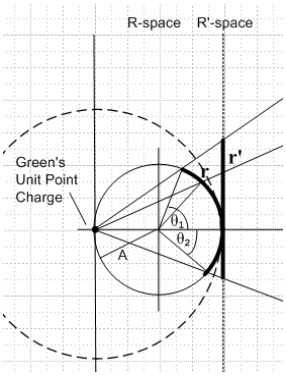

a = 2R

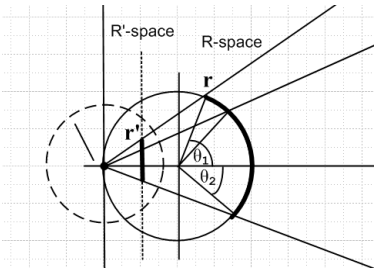

a < 2R

Here are some problems that are related by this kind of mapping. We have in mind the general case of a tilted bowl and off-center disk or iris, as shown in the left picture of the group above. The iris pictures arise when the bowl is drawn on the left side of its sphere.

1 grounded metal bowl ↔ grounded metal disk
2 grounded metal bowl ↔ grounded metal iris

3 grounded metal bowl + point charge on its cap ↔ grounded metal disk + point charge in disk plane
4 grounded metal bowl + point charge on its cap ↔ grounded metal iris + point charge in hole

5 grounded metal bowl + point charge on its cap ↔ charged metal disk
6 grounded metal bowl + point charge on its cap ↔ charged metal iris (but no such thing)

7 charged metal bowl ↔ grounded metal disk + point charge in space
8 charged metal bowl ↔ grounded metal iris + point charge in space

9 grounded metal barrel ↔ grounded metal washer
10 grounded metal barrel + point charge on its cap ↔ grounded metal washer + point charge in disk plane
11 grounded metal barrel + point charge on its cap ↔ charged metal washer
12 charged metal barrel ↔ grounded metal washer + point charge in space

In these applications, surface charge density always lies ON the sphere or plane.

(9) The Side-by-Side Sphere-Sphere Mapping. This is another of the "canonical" inversion mappings, Here is an illustration:

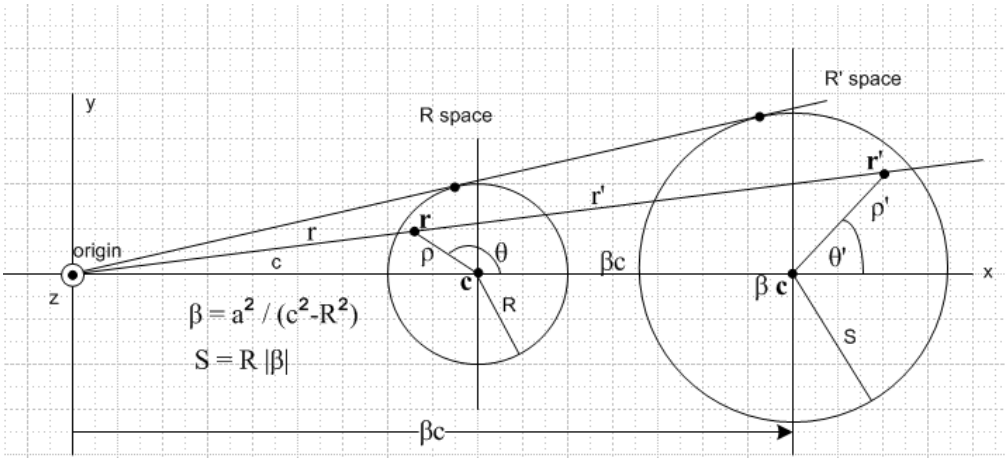

and here are some applications:

13 grounded metal sphere + point charge outside ↔ charged metal sphere
14 grounded metal disk ↔ grounded metal disk
15 grounded disk + point charge in its plane ↔ charged metal disk

Item 13 I did somewhere and showed it agrees with the usual image charge method. The other two cases are different from those of item (8) inasmuch as there is surface charge density *inside* the mapping sphere of interest in both R and R' space. In (8) the σ charge was always *on* the mapping sphere.

(10) The One-inside-the-Other Sphere-Sphere Mapping. Here is an illustration of this case:

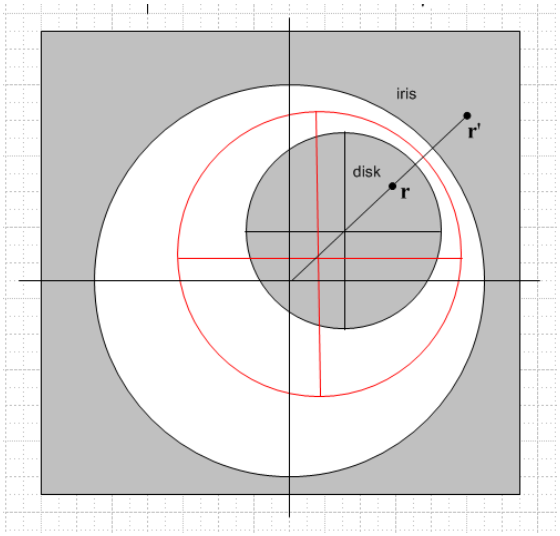

where the red sphere is the inversion sphere of radius a. Applications:

16 grounded disk ↔ grounded iris
17 charged disk ↔ grounded iris + charge in hole
18 grounded disk + charge in plane ↔ grounded iris + charge in hole.

I have never done problem 17 directly. I did it indirectly in my Smythe Problem 38 solution.