Doing the disk Green's problem by inversion PhL 7.6.10

The point charge is in the plane of the disk. This doc also talks about the iris Green's problem. The exact results for both disk and iris problems are presented in section 5 with pictures.

11.24.10 Note: As I wrote the Overview today, I found this to be in fact a "meaty" document with lots of high protein items in it, including the appendices. I can recommend the Overview to get the full picture. The doc is 22 pages + 5 pages of Overview, much of it mathematical details.

Older Comment: I wrote this doc before I wrote the doc summarizing the Jackson inversion formulas, and before I wrote the iris Green's doc after that. The latter is pretty well organized and self contained, whereas the doc you are now reading is poorly organized and has a lot of stuff copied from other docs. I don't really want to take time to clean it all up and make it as good as the iris doc, but I know the results here are correct. In case I someday decide to clean this up, say in order to present it to a class, I have included as Appendix D a new "front end" which I wrote elsewhere but never finished. It is the "front end" where the doc you are reading has poor organization, it gets better as you go on, and the summary of the disk and iris Green's functions is about as good as it can be.

Overview (5 pages, written 11.24.10) **1**
1. The Opening Gambit. **5**
2. Expressing things in nice R space coordinates. **8**
3. Doing the math for the potential **10**
4. Can we do a direct inversion between a charged disk and the in-hole iris Green's problem? ... **14**
5. A summary of the Iris and Disk Green's Function results **15**
6. Can we superpose these 2 solutions? Iris and Disk solutions are continuations of each other. **17**
Appendix A. Integrate the iris and disk problem charge densities. **19**
Appendix B: A non-useful application of The Chord Theorem to our Problem **22**
Appendix C: A Slippery Contradiction and its Resolution **24**
Appendix D: A better "front end" for this doc, to be used some rainy day. **26**

Overview (5 pages, written 11.24.10)

Section 1: use inversion to get the disk Green's potential and charge density

Consider two non-overlapping spheres related by inversion whose centers both lie on the positive x axis of an inversion coordinate system x,y,z. The intersection of these spheres with the z=0 plane is a pair of circles with centers at the sphere centers. The inversion maps the interiors of these circles into each other. We regard the interior region of each circle as a surface which is of course a disk, so the disks are mapped into each other in some manner. We know the perimeters are mapped into the perimeters.

We now set up a useful inversion situation. We make the right disk in R' space be a charged metal disk, something we know all about. We add to this a constant potential to bring the R' metal disk to V = 0.

This R' disk surface maps into the R space disk surface, causing it also to be at V = 0. The constant potential added in R' space creates a point charge in R space lying to the left of its disk.

Thus, we have a Charged Disk Problem in R' space related to a Green's Function Problem in R space. Here is a picture:

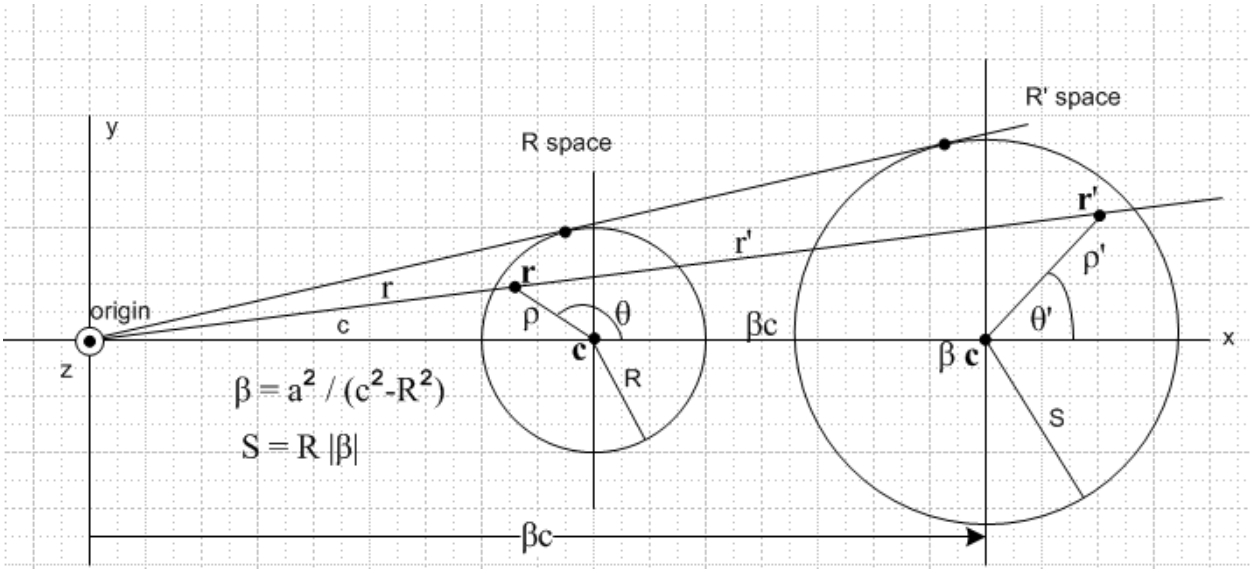

The inversion circle of radius a is centered at the origin and runs between the two disks (it is not shown). The disks have radius R and S, and the Green's charge is distance c from the center of its disk. Dimensionless parameter β is as shown. The picture shows primed and unprimed versions of r,ρ,θ.

In Section 1, we arrange to have the Green's charge scaled to +1, we do the inversion, and we obtain the following potential and charge density in R space:

$$g(\mathbf{r}|\xi) = -(2/\pi r)\sin^{-1}\left[\ 2S / \left(\sqrt{(\rho'-S)^2 + z'^2}\ + \sqrt{(\rho'+S)^2 + z'^2}\ \right)\right] + 1/r \qquad = \text{induced + point}$$

$$\sigma(\mathbf{r}) = -\ (a^2/\pi^2 r^3)\ \theta(S-\rho')/\sqrt{S^2-\rho'^2} \qquad \text{// sum of both sides}$$

$$\rho' = \sqrt{(x'-\beta c)^2 + y'^2} \qquad r = \sqrt{x^2+ y^2+ z^2} \qquad \mathbf{r'} = (a^2/r^2)\,\mathbf{r} \qquad \text{"}$$

This is fine, but we don't like the fact that various R' coordinates (and parameters like S) appear in our expressions and we wish to somehow eliminate these in favor of R space coordinates and parameters.

Section 2: figure out *how* to substitute for the R' space coordinates and parameters

Here we set about the task just outlined above. We first define a Cartesian system (X,Y,Z) which is centered at the center of the Green's disk.

$x = X+c$
$y = Y$
$z = Z$

Then we show that, since $\mathbf{r}' = (a^2/r^2)\,\mathbf{r}$,

$$x' = (a^2/r^2)(X+c) \qquad r = \sqrt{(X+c)^2 + Y^2 + Z^2}$$
$$y' = (a^2/r^2)Y$$
$$z' = (a^2/r^2)Z$$

Within the R system we have

$$\rho^2 = X^2 + Y^2$$
$$X = \rho\cos\theta$$
$$Y = \rho\sin\theta$$

so we combine these expressions to get

$$x' = (a^2/r^2)(\rho\cos\theta + c) \qquad r = \sqrt{(\rho\cos\theta+c)^2 + (\rho\sin\theta)^2 + Z^2}$$
$$y' = (a^2/r^2)\,\rho\sin\theta$$
$$z' = (a^2/r^2)Z$$

We show at this point that we can rewrite g this way by combining its two terms

$$g(\mathbf{r}|\xi) = +(2/\pi r)\cos^{-1}\left[\, 2S \,/\, \left(\sqrt{(\rho'-S)^2 + z'^2} + \sqrt{(\rho'+S)^2 + z'^2}\right)\right]$$

Section 3: go do those substitutions

Here we insert the above expressions for x',y',z' into our expressions for g and σ and find (after *much* algebra including Maple help) that

$$g(\mathbf{r}|\xi) = +(2/\pi r)\cos^{-1}\left\{\sqrt{2}\,R\,r \,/\, \sqrt{m + (c^2-R^2)\sqrt{[(R-\rho)^2+Z^2]\,[(R+\rho)^2+Z^2]}}\right\}$$
where $m = (\rho^2+Z^2)(c^2-R^2) + R^2(R^2+2r^2-c^2)$
$r^2 = \rho^2 + c^2 + 2c\rho\cos\theta + Z^2$

$$\sigma(\mathbf{r}) = -(1/\pi^2 r^2)\sqrt{c^2-R^2}\,/\sqrt{R^2-\rho^2}$$
where $r^2 = \rho^2 + c^2 + 2c\rho\cos\theta$

In the above expressions, θ=0 points *away* from the Green's charge. If we want θ = 0 to point *toward* the Green's charge, replace $\cos\theta \rightarrow -\cos\theta$.

Notice that only R-space coordinates and parameters now appear, that the inversion radius a does *not* appear, and that g is even in Z as we expect. Vectors **r** and ξ have the inversion origin, so $\xi = \mathbf{0}$ and $\mathbf{r} = (x,y,z) = (c+X,Y,Z)$. So we have the complete solution to the problem of the in-plane Green's Function for a metal disk.

Elsewhere I had already solved a different problem which was the in-plane Green's Function for an *iris*, using a different and complicated method. I found the following interesting fact:

Fact: If we change the "sign after the m" from + to –, the above g and σ *are* the iris problem solutions!

If you examine this with z = 0, you see that g = 0 on the disk for the + sign, and g = 0 on the iris for the – sign, so it at least "makes sense". Notice these facts for the disk and iris problems

disk	$\rho < R$	$c > R$
iris	$\rho > R$	$c < R$

so for each solution we write things in a way that gives positive quantities, for either g or σ. An explanation of *why* the two solutions are related in this way appears in Section 6 below.

Section 4: realize fast way to do the iris Green's problem

Here it occurred to me for the first time that you could relate the Charged Disk Problem to the in-plane Green's Function for the iris using this picture (inversion circle shown in red)

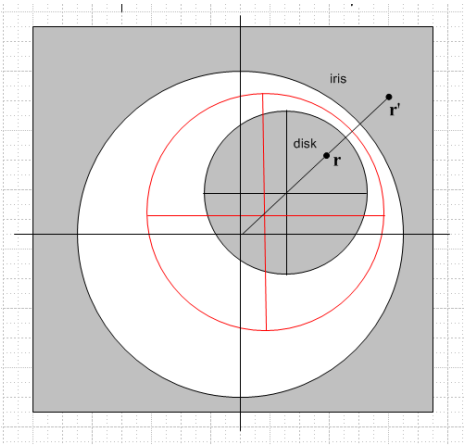

Since our two spheres are now one inside the other, the interior of the inside disk maps to the exterior of the outside disk, and this is just what we need for the iris problem. This was the correct picture for solving Smythe Problem 38 "the simple way" which had eluded me for so long (and which I had solved in a messy way using two sequential inversions with a bowl as an intermediary object). At this point I went off and worked out the solution of the in-plane iris Green's Function using the above inversion picture in the following document:

D:\Work\My Interests\Physics\E&M\Electrostatics
\inversion\Smythe Problem 38 Easy Way\ iris by inversion, Problem 38 the easy way.doc

and the result agrees with the comparison with the disk solution mentioned above.

In **Section 5** I give a **complete statement of the solutions to both the disk and iris in-plane Green's Functions**. Here I divide σ by 2 to get charge density on each side of the disk, and I change to the convention that θ = 0 points to the Green's charge, which negates cosθ.

In **Section 6** (in the note added today) I show that the disk and iris Green's function solutions are precisely **analytic continuations** of each other in terms of ρ treated as a complex variable. When we continue from

the ρ>R region to the ρ<R region, the sign of the radical $\sqrt{(\rho-R)^2 + z^2}$ changes, and this is what causes the "sign after the m" to change as we move between the disk and iris problem solutions. If you analytically continue in this manner, you find that the disk problem really becomes the iris problem, so it is not such a great mystery.

In **Appendix A** I integrate the charge densities for both the disk and iris case, assuming a Green's charge q_1. For the iris, I find that the total charge induced on the iris (both sides) is just $Q_{iris} = -q_1$ regardless of where the Green's charge is located in the hole. For the disk, however, the answer is different. I find that $Q_{disk} = -q_1 (2/\pi) \tan^{-1}(R/\sqrt{c^2-R^2})$ for both sides. If we move the Green's charge very close to the disk, this becomes $-q_1$. As you move the charge away from the disk. there is less charge induced on the disk and more induced on the sphere at ∞. For example, if you move to c = 10R, you find $Q_{disk} = -q_1 \{ \tan(1/\sqrt{99})/\pi \} = -q_1 \{ 0.1008/\pi \} = -q_1 \{0.03\}$.

In **Appendix B** I try to make use of the famous **Chord Theorem** to explain the complex math that it took Maple to compute in Section 3 above, but this attempt did not pan out. I know there is some trick, but I did not find it here.

In **Appendix C**, I cleared up a little **paradox**. I thought that the inversion mapped the center of our two disks into each other, but this was wrong. This is explained by the following picture which shows more detail of the inversion mapping.

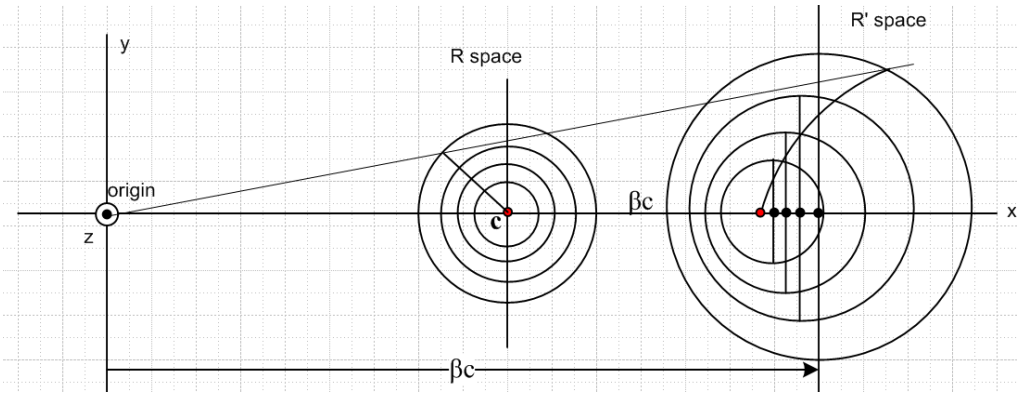

In **Appendix D**, I write a clearer version of the first parts of Section 1 that I thought I might use if I completely rewrote this entire document.

---

1. The Opening Gambit.

Kirk and Kelvin showed how you do this. First we need a picture. Recall the pictures I once made in Maple. Here is one with more interesting parameters, you see the two disks related by inversion.

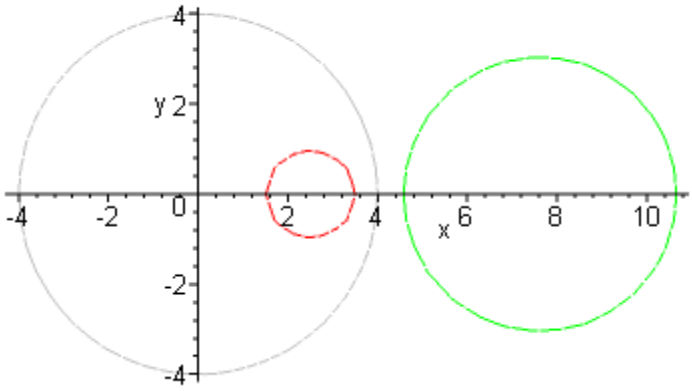

So here is our Visio drawing, which I shall embellish as I go:

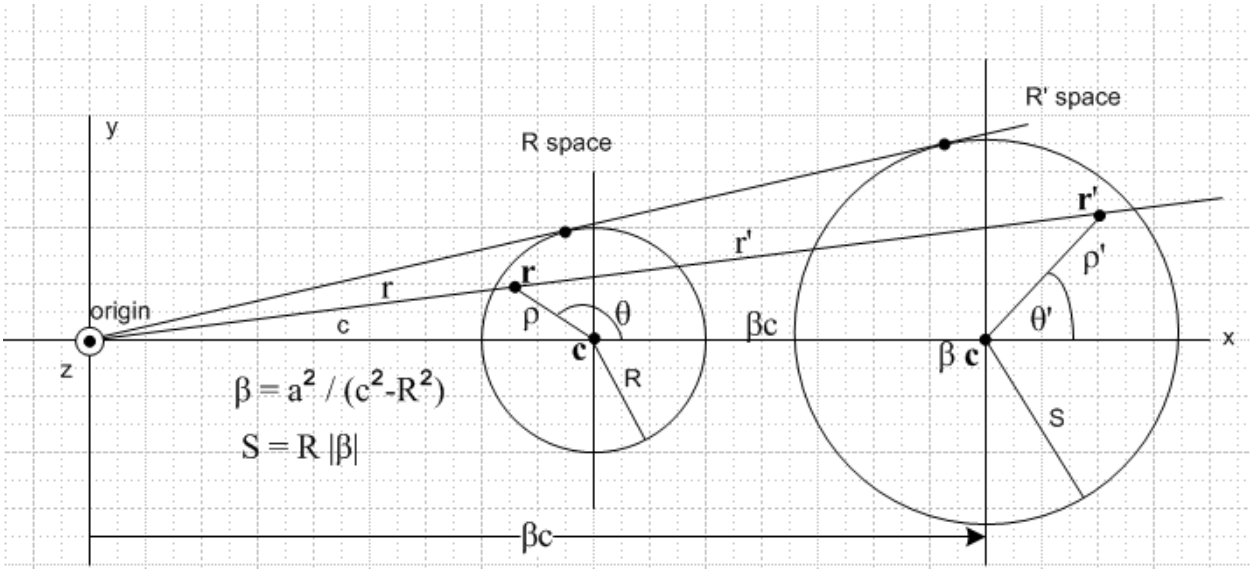

Just think of this as a cross section through the two spheres, right down the middle. I quote:

"Conclusion: a sphere of locus | **r** - **c** | = R in the original world becomes, in the inverted world, a sphere of locus | **r*** - β **c** | = S. So:

original sphere: radius R center **c**

new sphere: radius S center β**c**

where

$\beta = a^2 / (c^2 - R^2)$ $S = R\,|\beta|$ "

Now, if the R' space is our famous charged disk, we know that (inversion origin is the Cartesian origin)(and this is **sum of charge on both sides** of the disk, see green Jackson p 93)

$$\sigma'(\rho',\theta') = \sigma'(x',y') = (Q/2\pi S)\,\theta(S-\rho')/\sqrt{S^2-\rho'^2} \qquad \rho' = \sqrt{(x'-\beta c)^2 + y'^2} \qquad \rho' \le S$$

We can write

$$z = Z\,, \qquad z' = Z'$$
$$y = Y, \qquad y' = Y'$$

V will be the constant potential we decide to add in R' space which makes the disk there have V = 0. I now quote from Smythe Problem 38 Attempt #1, but I do some edits!

" Now, suppose our R' space disk carries a charge Q, has capacitance C and potential V = Q/C which we shall assume is positive. We then want to add in R' space a constant potential -V so that our disk in R' space will then be at zero potential (instead of potential V). We know that in R space this is reflected in the appearance of a point charge at the origin of magnitude q = a(-V). Let's assume we have done this. The result is that our R-space disk is now at zero potential (V=0 to V=0 theorem), and the situation then in R space is the Green's Function for a disk in the presence of charge q = -aV located at the origin. Our Green's function potential in R space is then

$$\Phi_G(\mathbf{r}) = (a/r)\,\Phi'(\mathbf{r'}) - (aV)/r = (a/r)\,\Phi'(\mathbf{r'}) - (aQ/C)/r$$

$$\Phi'(\mathbf{r'}) = (Q/S)\,\sin^{-1}\left[\ 2S \,/\, \left(\sqrt{(\rho'-S)^2 + z'^2} + \sqrt{(\rho'+S)^2 + z'^2}\ \right)\right]$$

$$\rho' = \sqrt{(x'-\beta c)^2 + y'^2} \qquad r = \sqrt{x^2 + y^2 + z^2} \qquad \mathbf{r'} = (a^2/r^2)\,\mathbf{r}$$

But we really want to have a *unit positive* Green's point charge, so let's scale the above result by multiplying our entire solution by -1/q = -C/(aQ). Then for our unit positive point charge, our true Green's function is then this:

$$g(\mathbf{r}|\xi) = -C/(aQ)\,(a/r)\,\Phi'(\mathbf{r'}) - (aQ/C)/r \ * -C/(aQ) \qquad \xi = (0,0,-R) = \text{Green's charge loc}$$

$$= -C/(Q)\,(1/r)\,\Phi'(\mathbf{r'}) + 1/r = -(C/Qr)\,\Phi'(\mathbf{r'}) + 1/r$$

$$= -(C/Qr)\,(Q/S)\,\sin^{-1}\left[\ 2S \,/\, \left(\sqrt{(\rho'-S)^2 + z'^2} + \sqrt{(\rho'+S)^2 + z'^2}\ \right)\right] + 1/r$$

But we know the C = S (2/π) so

$$(C/Qr)\,(Q/S) = (C/r)\,(1/S) = (C/S)(1/r) = (2/\pi r)$$

so we continue to get

$$= -(2/\pi r)\,\sin^{-1}\left[\ 2S \,/\, \left(\sqrt{(\rho'-S)^2 + z'^2} + \sqrt{(\rho'+S)^2 + z'^2}\ \right)\right] + 1/r$$

So our full result is now:

$$g(\mathbf{r}|\xi) = -(2/\pi r)\,\sin^{-1}\left[\ 2S \,/\, \left(\sqrt{(\rho'-S)^2 + z'^2} + \sqrt{(\rho'+S)^2 + z'^2}\ \right)\right] + 1/r$$

$$\sigma(\mathbf{r}) = (a/r)^3\, \sigma'(\mathbf{r}') = (a/r)^3 \;\; (Q/2\pi S)\, \theta(S-\rho')/\sqrt{S^2-\rho'^2}$$

$$\rho' = \sqrt{(x'-\beta c)^2 + y'^2} \qquad r = \sqrt{x^2+ y^2+ z^2} \qquad \mathbf{r}' = (a^2/r^2)\, \mathbf{r} \qquad "$$

And so ends my edited stuff from Attempt #1. We have all our answers for the situation in R space, it only remains to somehow convert things from R' space coordinates to R space coordinates.

Notice that we will set z' = 0 when talking about σ. It needs to be rescaled as well for a unit point charge. We start with this from above

$$\sigma'(\rho',\theta') = \sigma'(x',y') = (Q/2\pi S)\, \theta(S-\rho')/\sqrt{S^2-\rho'^2} \qquad \rho' = \sqrt{(x'-\beta c)^2 + y'^2} \qquad \rho' \le S$$

and we multiply by -C/(aQ) as above to with C = S (2/π) to get

$$-C/(aQ) = -\, S\, (2/\pi)/(aQ) = -\, (S/a)(2/\pi)(1/Q)$$

$$\sigma'(\rho',\theta') = -\, (S/a)(2/\pi)(1/Q)\, (Q/2\pi S)\, \theta(S-\rho')/\sqrt{S^2-\rho'^2}$$

$$= -\, (1/a)(2/\pi)\, (1/2\pi)\, \theta(S-\rho')/\sqrt{S^2-\rho'^2}$$

$$= -\, (1/a\pi^2)\, \theta(S-\rho')/\sqrt{S^2-\rho'^2}$$

Then in R space we have

$$\sigma(\mathbf{r}) = (a/r)^3\, \sigma'(\mathbf{r}') = -\, (1/a\pi^2)\, (a/r)^3 \theta(S-\rho')/\sqrt{S^2-\rho'^2}$$

$$= -\, (a^2/\pi^2 r^3)\; \theta(S-\rho')/\sqrt{S^2-\rho'^2}$$

2. Expressing things in nice R space coordinates.

The first obvious things we know are these

$$x' = (a^2/r^2)x \qquad r = \sqrt{x^2+ y^2+ z^2}$$
$$y' = (a^2/r^2)y$$
$$z' = (a^2/r^2)z$$

so that takes us to inversion origin Cartesian coordinates in R space, boom! Next, we know that

$$x = X+c$$
$$y = Y$$
$$z = Z$$

where X,Y,Z are now Cartesians centered on the R space disk center. So

$x' = (a^2/r^2)(X+c)$ $\qquad r = \sqrt{(X+c)^2 + Y^2 + Z^2}$

$y' = (a^2/r^2)Y$

$z' = (a^2/r^2)Z$

Wow, this is going pretty fast. The final step is to get into R space cylindricals with R disk center.

$\rho^2 = X^2 + Y^2$

$X = \rho\cos\theta$

$Y = \rho\sin\theta$

so our lines above are now

$x' = (a^2/r^2)(\rho\cos\theta + c)$ $\qquad r = \sqrt{(\rho\cos\theta+c)^2 + (\rho\sin\theta)^2 + Z^2}$

$y' = (a^2/r^2)\rho\sin\theta$

$z' = (a^2/r^2)Z$

So let's pause to restate our results to this point:

$$g(\mathbf{r}|\xi) = -(2/\pi r)\sin^{-1}\left[\ 2S / \left(\sqrt{(\rho'-S)^2 + z'^2} + \sqrt{(\rho'+S)^2 + z'^2}\ \right)\right] + 1/r$$

$$\sigma(\mathbf{r}) = (a/r)^3\,\sigma'(\mathbf{r}') = (a/r)^3\ (Q/2\pi S)\,\theta(S-\rho')/\sqrt{S^2-\rho'^2}$$

$\rho' = \sqrt{(x'-\beta c)^2 + y'^2}$ $\qquad \mathbf{r}' = (a^2/r^2)\,\mathbf{r}$

$x' = (a^2/r^2)(\rho\cos\theta + c)$ $\qquad r = \sqrt{(\rho\cos\theta+c)^2 + (\rho\sin\theta)^2 + Z^2}$

$y' = (a^2/r^2)\rho\sin\theta$ $\qquad \beta = a^2 / (c^2-R^2)$

$z' = (a^2/r^2)Z$ $\qquad S = R\,|\beta| = R\,a^2/|\,c^2-R^2|$

So we have achieved our goal of everything expressed in R space cylindricals relative to disk center. We do have some other useful facts which I added above lower right. We now have a and β kicking around I think the way we had a and d kicking around in the disk/bowl inversion problem. And we are going to have exactly the same "math problem" in order to simplify our results, at least it is very similar. The results g and σ can, of course, only depend on R, ρ, θ, Z and c (distance of Green's point charge from R space disk center). Somehow, we expect a and β to go away.

<u>Combine two terms in g</u> . We have

$$g(\mathbf{r}|\xi) = -(2/\pi r)\{\ \sin^{-1}\left[\ 2S / \left(\sqrt{(\rho'-S)^2 + z'^2} + \sqrt{(\rho'+S)^2 + z'^2}\ \right)\right] - \pi/2\ \}$$

and we look at Schaum p 18 saying $\sin^{-1} + \cos^{-1} = \pi/2$, so $\sin^{-1} - \pi/2 = -\cos^{-1}$ and result is then

$$g(\mathbf{r}|\xi) = +(2/\pi r)\cos^{-1}\left[\ 2S / \left(\sqrt{(\rho'-S)^2 + z'^2} + \sqrt{(\rho'+S)^2 + z'^2}\ \right)\right]$$

Demonstrate independence of a. The results cannot depend on a, and if they do, we have done something wrong. Inside the arcsin the numerator will have a^2. The denom insides of radicals have a^4 so yes, all is well inside here. And outside we have 1/r which we just leave as part of the answer like r_1 of the iris. But wait! Our ρ' also has a c sitting in there which has the wrong a dependence!

3. Doing the math for the potential

Our expression for r is already "clean", just a function of ρ,θ,c,Z. But we need to get rid of ρ' and S. I will follow my earlier method as presented in "3. Doing the second inversion" Section (13), page 20. We start with our ellipse theorem,

$$(1/2)\left(\sqrt{(x-a)^2+y^2}+\sqrt{(x+a)^2+y^2}\right)^2 = (x^2+y^2+a^2)+\sqrt{(x^2-y^2-a^2)^2+4x^2y^2}$$

Set y = Z, x = ρ', a = S and this says

$$\left(\sqrt{(\rho'-S)^2+z'^2}+\sqrt{(\rho'+S)^2+z'^2}\right)^2 = 2(\rho'^2+z'^2+S^2)+2\sqrt{(\rho'^2-z'^2-S^2)^2+4\rho'^2z'^2}$$

where

$\rho' = \sqrt{(x'-\beta c)^2+y'^2}$ $\qquad$ $\mathbf{r'} = (a^2/r^2)\,\mathbf{r}$

$x' = (a^2/r^2)(\rho\cos\theta + c)$ $\qquad$ $r = \sqrt{(\rho\cos\theta+c)^2+(\rho\sin\theta)^2+Z^2}$

$y' = (a^2/r^2)\,\rho\sin\theta$ $\qquad$ $\beta = a^2/(c^2-R^2)$

$z' = (a^2/r^2)Z$ $\qquad$ $S = R\,|\beta|$

Now I am obstinately ignoring Kelvin's elegant geometry and am sticking to my brute-force Maple guns. I want to evaluate the RHS of the ellipse theorem, but I want to clear away all denominators and then just let Maple "have at it". I don't know the answer yet for σ, since this is not a Smythe problem, so I am on my own here. I will use some of the same symbols I used last time (denom of arc cosine = dac)

$$dac2 = 2(\rho'^2+z'^2+S^2)+2\sqrt{(\rho'^2-z'^2-S^2)^2+4\rho'^2z'^2}$$

First, we want to clear out the denominator of β,

$$\beta = a^2/(c^2-R^2)$$

as well as the power of r, so multiply dac2 by

$$f^2 \equiv (c^2-R^2)^2\,r^4 \qquad\qquad L^8$$

and we get

$$f^2\,dac2/2 = (f^2\rho'^2+f^2z'^2+f^2S^2)+\sqrt{(f^2\rho'^2-f^2z'^2-f^2S^2)^2+4\,f^2\rho'^2\,f^2z'^2} \qquad L^{10}$$

Unlike the iris case, I don't think there is more to do, all denominators are now cleared. So the next step is to enter it into Maple. One other fact is to solve the r equation so we can eliminate θ

$r^2 = \rho^2+c^2+Z^2+2c\rho\cos\theta$

$\cos\theta = (r^2- \rho^2-c^2-Z^2)/(2c\rho);$

Now when I do all this in Maple (" **disk greens.mws** " , the first thing that comes out is the stuff in the radical above which I will call argrad, and which in my code is t2 + t3. We find that

argrad= $k := (c-R)^2 (c+R)^2 (R^2+Z^2-2\rho R+\rho^2)(R^2+Z^2+2\rho R+\rho^2) a^8 r^4$

which looks pretty good. Write as

$\text{argrad} = a^8r^4(c^2-R^2)^2 [(R-\rho)^2 + Z^2] [(R+\rho)^2 + Z^2]$ $\qquad L^{20}$

Now we turn to the outside terms which we will call j.

$j = (f^2\rho'^2 + f^2z'^2 + f^2S^2) = t1 =$ $\qquad L^{10}$

$$(2R^2r^2 - Z^2R^2 - \rho^2R^2 + \rho^2c^2 - c^2R^2 + Z^2c^2 + R^4)a^4r^2$$

The large factor can be written this way

$m = (\rho^2+ Z^2)(c^2-R^2) + R^2(R^2+ 2r^2-c^2)$ $\qquad L^4$

Then this term is

$j = a^4r^2 m$ $\qquad L^{10}$

and both j and $\text{argrad}^{1/2}$ are L^{10}, so at least they are the same. So at this point we have shown that

$f^2\ dac2/2 = a^4r^2\ m + (\ a^8r^4(c^2-R^2)^2 [(R-\rho)^2 + Z^2] [(R+\rho)^2 + Z^2]\ )^{1/2}$

$= a^4r^2 [\ m + (c^2-R^2)\sqrt{[(R-\rho)^2 + Z^2] [(R+\rho)^2 + Z^2]}\ ]$ $\qquad L^{10}$

where we use from above

$f^2 \equiv (c^2-R^2)^2 r^4$ $\qquad L^8$

which says

$(c^2-R^2)^2 r^4\ dac2/2 = a^4r^2 [\ m + (c^2-R^2)\sqrt{[(R-\rho)^2 + Z^2] [(R+\rho)^2 + Z^2]}\ ]$ $\qquad L^{10}$

so we must then have

$$dac2/2 = a^4 r^{-2} (c^2-R^2)^{-2} [\, m + (c^2-R^2)\sqrt{[\,(R-\rho)^2 + Z^2][\,(R+\rho)^2 + Z^2]}\,] \qquad L^2$$

where m, as we see above, do not depend on a. We now take the square root

$$dac = \sqrt{2}\, a^2\, r^{-1} (c^2-R^2)^{-1} \sqrt{m + (c^2-R^2)\sqrt{[\,(R-\rho)^2 + Z^2][\,(R+\rho)^2 + Z^2]}} \qquad L^1$$

$$1/dac = (1/\sqrt{2}\, a^2)\, r\, (c^2-R^2) / \sqrt{m + (c^2-R^2)\sqrt{[\,(R-\rho)^2 + Z^2][\,(R+\rho)^2 + Z^2]}}$$

Inside our $\cos^{-1}$ we have 2S/dac where

$$S = R\, a^2/ |\, c^2-R^2| = R\, a^2/ (c^2-R^2) \qquad L^1$$

so

$$2S/dac = 2\, R\, a^2/ (c^2-R^2)\, (1/\sqrt{2}\, a^2)\, r\, (c^2-R^2) / \sqrt{m + (c^2-R^2)\sqrt{[\,(R-\rho)^2 + Z^2][\,(R+\rho)^2 + Z^2]}}$$

$$= \sqrt{2}\, R\, r / \sqrt{m + (c^2-R^2)\sqrt{[\,(R-\rho)^2 + Z^2][\,(R+\rho)^2 + Z^2]}} \qquad L^0$$

which we are happy to see does not depend on a. Then we have

$$g(\mathbf{r}|\xi) = + (2/\pi r) \cos^{-1} \{ \sqrt{2}\, R\, r / \sqrt{m + (c^2-R^2)\sqrt{[\,(R-\rho)^2 + Z^2][\,(R+\rho)^2 + Z^2]}}\ \}$$

$$m = (\rho^2 + Z^2)(c^2-R^2) + R^2(R^2 + 2r^2-c^2)$$

which looks very iris like! It is independent of a, it is even in Z. For the iris we had

$$\Phi_{iris}(\mathbf{r'}) = q_1\, (2/\pi r_1) \cos^{-1} [\, (\sqrt{2}\ Br_1/\sqrt{m + (B^2 - S^2)\sqrt{[\,(\rho'-B)^2+Z_i^2][\,(\rho'+B)^2+Z_i^2]}}\ ]$$

$$m = (\rho'^2+Z_i^2)(S^2-B^2) + B^2(B^2 - S^2 + 2r_1^2)$$

If we set $B \rightarrow R$ as the disk radius, and $S \rightarrow c$ as the distance of Green's charge from disk origin, we get

$$\Phi_{iris}(\mathbf{r'}) = q_1\, (2/\pi r_1) \cos^{-1} [\, (\sqrt{2}\ Rr_1/\sqrt{m + (R^2 - c^2)\sqrt{[\,(\rho'-R)^2+Z_i^2][\,(\rho'+R)^2+Z_i^2]}}\ ]$$

$$m = (\rho'^2+Z_i^2)(c^2-R^2) + R^2(R^2 - c^2 + 2r_1^2)$$

and we happily see that the results are exactly the same except for one sign inside the radical. Below we will compare r and r_1 and they too are the same.

Now, what about the charge density? From above we found that

$$\sigma(\mathbf{r}) \;=\; -\;(a^2/\pi^2 r^3)\;\theta(S-\rho')/\sqrt{S^2-\rho'^2}$$

Maple has some good news here (think Z = 0). We have for $S^2 - \rho'^2$ this simple result: [see Appendix B]

```
e := S^2-rhop^2:simplify(%);
```

$$\frac{(-\rho^2 - Z^2 + R^2)\,a^4}{r^2\,(c^2 - R^2)}$$

so that (again, Z = 0)

$$\sqrt{S^2-\rho'^2} \;=\sqrt{R^2-\rho^2}\;\; a^2/\,[\; r\,\sqrt{c^2-R^2}\;]$$

$$1/\sqrt{S^2-\rho'^2} \;= r\,\sqrt{c^2-R^2}\;/\,[\sqrt{R^2-\rho^2}\;a^2]$$

Our result is then

$$\sigma_{\mathbf{disk}}(\mathbf{r}) \;=\; -\;(a^2/\pi^2 r^3)\;\theta(S-\rho')/\sqrt{S^2-\rho'^2}$$

$$=\; -\;(a^2/\pi^2 r^3)\; r\,\sqrt{c^2-R^2}\;/\,[\sqrt{R^2-\rho^2}\;a^2]$$

$$=\; -\;(1/\pi^2 r^2)\,\sqrt{c^2-R^2}\;/\sqrt{R^2-\rho^2}$$

This is the sum of both sides. Let's now change to one side and have Green's charge be q_1. Then

$$\sigma_{\mathbf{disk}}(\mathbf{r}) \;=\; -\;q_1(1/(2\pi^2 r^2)\;\sqrt{c^2-R^2}\;/\sqrt{R^2-\rho^2} \qquad \text{disk radius = R} \qquad \text{green's c from center}$$

which reminds us a lot of our one-side iris result which was, from Smythe problem 38 ,

$$\sigma_{\mathbf{iris}}(\rho,\varphi) \;=\; -q_1(\;1/2\pi^2 r_1{}^2)\sqrt{B^2-S^2}\;/\,\sqrt{\rho^2 - B^2} \qquad \text{disk radius = B} \qquad \text{greens S from center}$$

Suppose in our iris problem we change disk radius to be B→ R, and point charge from center S→c, and we call the distance from the green's charge to a point on the disk r. Then

$$\sigma_{\mathbf{iris}}(\rho,\varphi) \;=\; -q_1(\;1/2\pi^2 r^2)\sqrt{R^2-c^2}\;/\,\sqrt{\rho^2 - R^2} \qquad \text{disk radius = R} \qquad \text{greens c from center}$$

Then we put these results side by side

$$\sigma_{\mathbf{disk}}(\mathbf{r}) \;=\; -\;q_1(1/(2\pi^2 r^2)\;\sqrt{c^2-R^2}\;/\sqrt{R^2-\rho^2} \qquad \text{disk radius = R} \qquad \text{green's c from center}$$

$$\sigma_{\mathbf{iris}}(\rho,\varphi) \;=\; -q_1(\;1/2\pi^2 r^2)\sqrt{R^2-c^2}\;/\,\sqrt{\rho^2 - R^2} \qquad \text{disk radius = R} \qquad \text{greens c from center}$$

The results are exactly the same !!!! I think this is pretty good evidence that I have the right answer for the σ part of this disk Green's problem.

In the disk problem we had

$$r^2 = \rho^2+c^2+2c\rho\cos\theta$$

In the iris problem we had

$$r_1^2 = (\rho'^2 + S^2 + 2S\rho'\cos\varphi) \rightarrow \rho'^2 + c^2 + 2c\rho'\cos\varphi$$

In both cases it is the distance between the point charge and a point on the disk or iris.

4. Can we do a direct inversion between a charged disk and the in-hole iris Green's problem?

[See doc " iris by inversion, Problem 38 the easy way.doc" where I carry out this proposed plan.]

I never thought about this before. Consider this simple picture

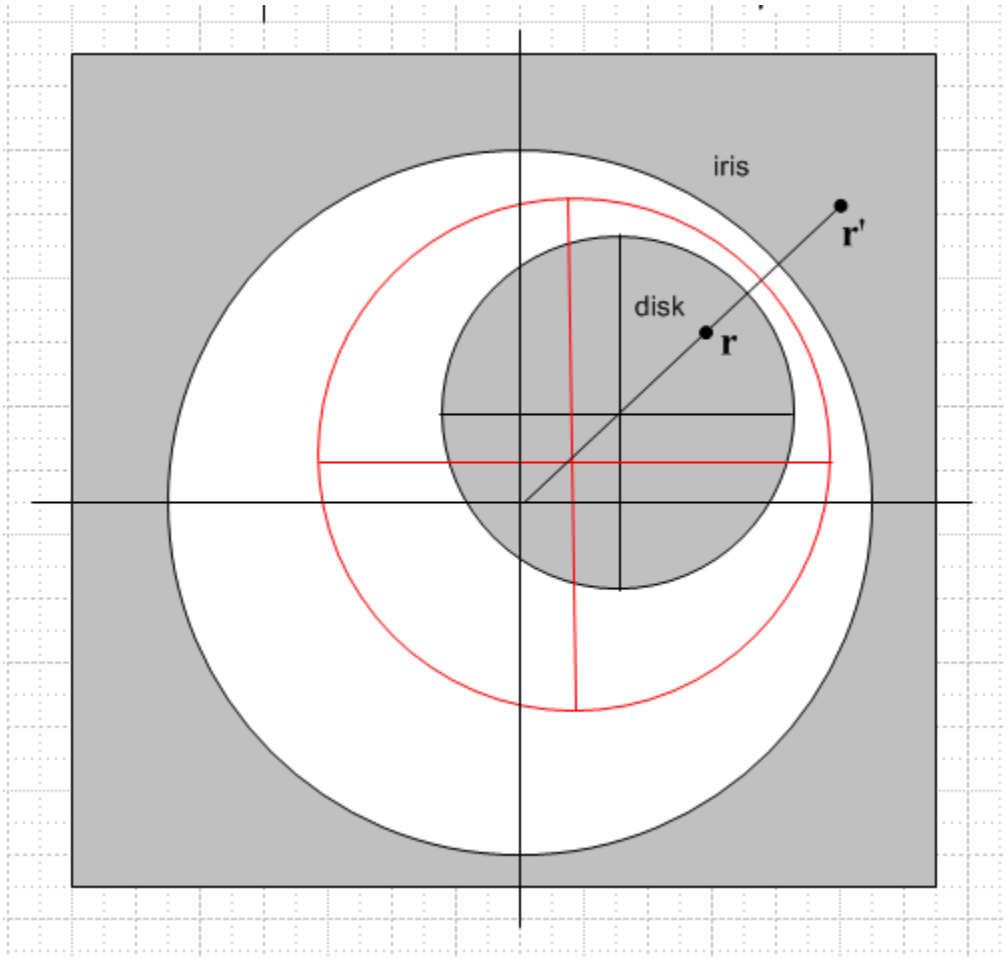

Yes, it maps the inner sphere to the outer sphere, but the inside of the inner maps to the outside of the outer, and if you look at the central slice, you get an inversion connection between iris and disk. So start with the inner disk and you invert to the iris with a point charge in its hole off center! I have never seen this picture before in any book. So this provides a near trivial solution to Smythe Problem 38, that is what I was never seeing!! I solved the problem by an incredibly indirect path (and I learned a lot doing it), but this is the obvious way to do it. You would jazz up this picture with lots more guidelines and have representative interior points on both disk and iris.

Lest there be any doubt, here is from my Maple program

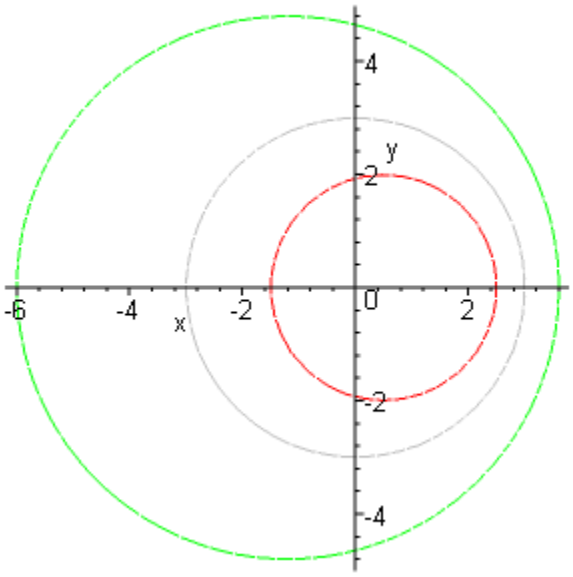

But this inversion does NOT involve the Green's function of the disk, only of the iris. To do the disk, we have to use the inversion discussed above in *this* doc!

5. A summary of the Iris and Disk Green's Function results

(a) Potential and surface charge for the iris problem. First, here is a picture:

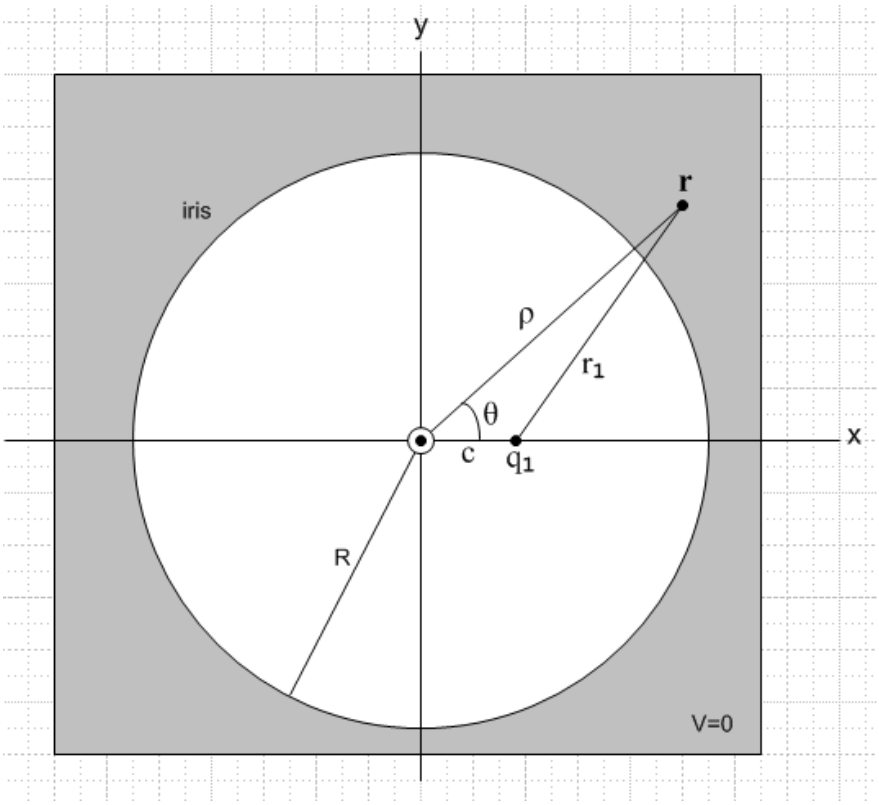

$\Phi_{\mathbf{iris}}(\rho,\theta,z) = q_1(2/\pi r_1)\cos^{-1}\left[\left(\sqrt{2}\,Rr_1/\sqrt{m + (R^2 - c^2)\sqrt{[(\rho-R)^2+z^2]\,[(\rho+R)^2+z^2]}}\right)\right]$

$m = (\rho^2+z^2)(c^2-R^2) + R^2(R^2 - c^2 + 2r_1^2)$

$r_1^2 = (\rho^2 + c^2 + z^2 - 2c\rho\cos\theta)$

$\sigma_{\mathbf{iris}}(\rho,\theta) = -q_1\left[1/(2\pi^2 r_1^2)\right]\sqrt{R^2-c^2}\,/\sqrt{\rho^2 - R^2}$ // each side

$r_1^2 = (\rho^2 + c^2 - 2c\rho\cos\theta)$

total charge induced on the iris = $-q_1$

(b) Potential and surface charge for the disk problem. First, here is a picture:

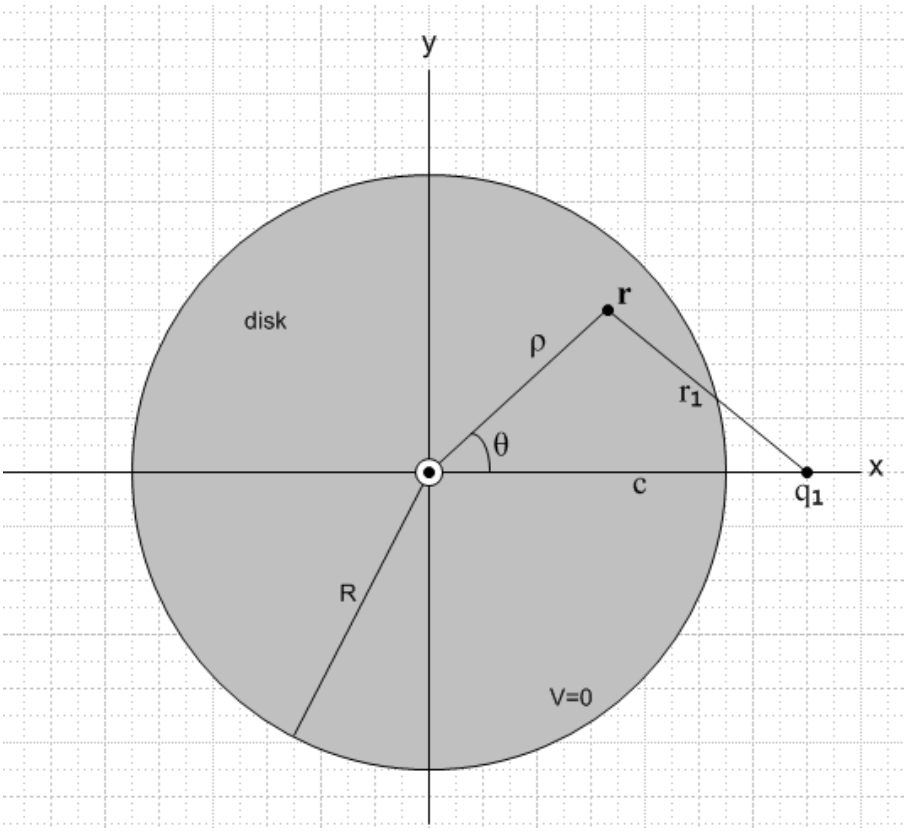

$\Phi_{disk}(\rho,\theta,z) = q_1 (2/\pi r_1) \cos^{-1} \{ \sqrt{2}\, R\, r_1 \,/ \sqrt{m + (c^2-R^2)\sqrt{[(R-\rho)^2+z^2]\,[(R+\rho)^2+z^2]}} \}$

$m = (\rho^2+z^2)(c^2-R^2) + R^2(R^2-c^2+2r_1^2)$

$r_1^2 = (\rho^2 + c^2 + z^2 - 2c\rho\cos\theta)$

$\sigma_{disk}(\mathbf{r}) = - q_1(1/(2\pi^2 r_1^2)\sqrt{c^2-R^2}/\sqrt{R^2-\rho^2}$ // each side

$r_1^2 = (\rho^2 + c^2 - 2c\rho\cos\theta)$

total charge induced on the disk = $- q_1 (2/\pi) \tan^{-1}(R/\sqrt{c^2-R^2})$

6. Can we superpose these 2 solutions? Iris and Disk solutions are continuations of each other.

We refer to our doc "superposition in electrostatics". Normally, if Problem 1 and Problem 2 each have 1 piece of metal and do not overlap (they are different pieces of metal), you cannot superpose to get a viable Problem 3. The reason is that in Problem 1, the potential on Metal #2 is variable, but in Problem 3 it is constant. In our problem here, Metal #2 might be the disk and in Problem 1 (green's of iris), the potential on the "math disk" is variable. I was vaguely thinking of superposing the iris with some q_1 and the disk with $-q_1$ and showing the result should be zero. But in order to get zero, we have to have "c" be the same in both cases, and that leads to the next paragraph which relieves us from doing a superposition.

Let Problem 1 be the iris Green's, and Problem 2 be the disk Green's. Think of each being a function of the variable c which we promote to be a complex variable in some "c plane". Suppose we take our iris Green's solution and we try to "continue" it to a region where c > R, which puts the point charge on the iris, but perhaps we add an ε z displacement so it is a little off to one side or the other of the iris. I

conjecture that, when you do this, you will find that the potential is no longer V = 0 on the iris, but is now V = 0 in the hole of the iris! And the charge density becomes imaginary on the iris, but becomes real inside the hole. In other words, my conjecture is that the disk Green's solution is simply the analytic continuation of the iris Green's solution, and that is why the expression for the potential is exactly the same in both cases, as shown above. I solved both problems independently and found that the potential expression is the same in the two cases.

In my double inversion method doc "3. Doing the second inversion", I show in section (14) why V = 0 on the iris. It involves an exact cancellation between the two terms in the radical (one is m) :

$$\sqrt{m + (c^2-R^2)\sqrt{[(R-\rho)^2 + z^2]\,[(R+\rho)^2 + z^2]}}$$

When we do the analytic continuation, nothing dramatic happens. It's just that the factor (c^2-R^2) changes sign, and this causes V = 0 to move from the iris to the disk! So I think this clinches the argument.

Note added 11.24.10 while writing the overview: I examine this problem here:

D:\Work\My Interests\Math\Ahlfors Complex Analysis\A study of power branch points.doc

Here is what happens. Start off let's say with R > ρ. Think of the inner radical as the product of two radicals, one of which is this:

$$f(\rho) = \sqrt{(\rho-R)^2 + z^2} = \sqrt{(\rho - a_+)(\rho - a_-)} = \sqrt{\rho - a_+}\,\sqrt{\rho - a_-} \qquad \text{where } a_\pm = R \pm iz$$

This function has a branch cut joining the two branch points.

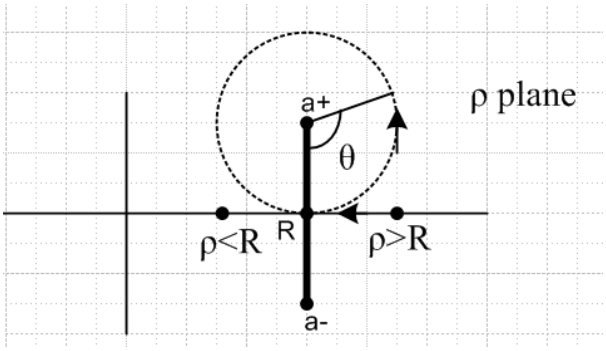

If we start out at some point ρ > R and move to the left, we will hit this cut. If we want to stay on the same sheet of the function f(ρ), we have to go around one of the branch points. We could go CCW around the dotted circle and here is what happens, where we start with θ = 0 when ρ = R+ε :

$$\sqrt{\rho - a_+} = \sqrt{|\rho - a_+|}\, e^{-i\theta/2} \qquad \rightarrow \sqrt{|\rho - a_+|}\, e^{-i\pi} = -\sqrt{|\rho - a_+|} = -\sqrt{a_+ - \rho}$$

Suppose we go around the upper one. Then $(\rho-a_+)$ picks up a phase $+2\pi$ as we go round a^+ and this causes $\sqrt{\rho - a_+}$ to pick up a factor of -1. The same of course happens if we go around the lower branch point. So here is the point: if we analytically continue from the ρ>R region to the ρ<R region, we find that

$$\sqrt{(\rho-R)^2 + z^2} \;\rightarrow\; -\sqrt{(R-\rho)^2 + z^2}$$
$$\rho>R \qquad\qquad \rho<R$$

This is the continuation you take to go from the iris solution to the disk solution, and this is why we find that the sign "after the m" changes when you move between these solutions. So we are doing analytic continuation in complex variable ρ, not in c as conjectured above!

Appendix A. Integrate the iris and disk problem charge densities.

(1) for the iris:

For the iris problem with charge in hole we have this charge induced onto each side of the iris

$$\sigma_{\mathbf{iris}}(\rho,\theta) \;=\; -q_1[\; 1/(2\pi^2 r_1^2)]\,\sqrt{R^2-c^2}\,/\,\sqrt{\rho^2 - R^2}$$

The total charge on the iris is then this:

$$Q_{\mathbf{iris}} = -q_{1*}\;\; 1/(2\pi^2) * \sqrt{R^2-c^2} \;\; * \;\; \int_{\mathbf{R}}^{\infty} \rho d\rho \; (1/\sqrt{\rho^2 - R^2}\,) \;\; \int_{\mathbf{0}}^{\mathbf{2\pi}} d\theta \; 1/(\; \rho^2 + c^2 - 2c\rho\,\cos\theta\;)$$

I look up this angular integral in my Math book notes where I have

$$\int_{\mathbf{0}}^{\mathbf{2\pi}} d\theta \; 1/(a \pm b\cos\theta) = 2\pi/\sqrt{a^2-b^2}$$

so here we get

$$\int_{\mathbf{0}}^{\mathbf{2\pi}} d\theta \; 1/(\; \rho^2 + c^2 - 2c\rho\,\cos\theta\;) \;=\; 2\pi\,/(\rho^2-c^2) \qquad\qquad \text{since } \rho > c \text{ for the iris}$$

We then have

$$Q_{\mathbf{iris}} = -q_{1*}\;\; 1/(2\pi^2) * \sqrt{R^2-c^2} * 2\pi * \;\; \int_{\mathbf{R}}^{\infty} \rho d\rho \; (1/\sqrt{\rho^2 - R^2}\,)(1/(\rho^2-c^2))$$

$$= -q_{1*}\;\; 1/\pi * \sqrt{R^2-c^2} * \;\; \int_{\mathbf{R}}^{\infty} \rho d\rho \; (1/\sqrt{\rho^2 - R^2}\,)(1/(\rho^2-c^2))$$

We obviously want the change variables to $x = \rho^2$ and $dx = 2\rho d\rho$ to get

$$= -q_{1*}\;\; 1/\pi * \sqrt{R^2-c^2} * 1/2 * \;\; \int_{\mathbf{R^2}}^{\infty} dx \; (1/\sqrt{x - R^2}\,)(1/(x-c^2))$$

Throw this into Wolfram and we get

$$\int \frac{\frac{1}{\sqrt{x-r^2}}}{x-c^2}\,dx =$$

$$-\frac{2\tanh^{-1}\left(\frac{\sqrt{x-r^2}}{\sqrt{c^2-r^2}}\right)}{\sqrt{c^2-r^2}}$$

As discussed elsewhere, we have to "process" this result. We have R > c, so just pick a phase

$\sqrt{c^2\text{-}R^2} = -i\sqrt{R^2\text{-}c^2}$

Then we have

$= -2\tanh^{-1}(i\sqrt{x\text{-}R^2}/\sqrt{R^2\text{-}c^2})/(-i\sqrt{R^2\text{-}c^2}) = -2i\tan^{-1}(\sqrt{x\text{-}R^2}/\sqrt{R^2\text{-}c^2})/(-i\sqrt{R^2\text{-}c^2})$

$= +2\tan^{-1}(\sqrt{x\text{-}R^2}/\sqrt{R^2\text{-}c^2})/\sqrt{R^2\text{-}c^2}$

and this is the correctly processed form of the integral result that we can now use. So we find

$Q_{iris} = -q_{1*}\ 1/\pi * \sqrt{R^2\text{-}c^2} * 1/2 * \int_{R^2}^{\infty} dx\ (1/\sqrt{x - R^2})(1/(x\text{-}c^2))$

$= -q_{1*}\ 1/\pi * \sqrt{R^2\text{-}c^2} * 1/2 * [2\tan^{-1}(\sqrt{x\text{-}R^2}/\sqrt{R^2\text{-}c^2})/\sqrt{R^2\text{-}c^2}]|^{\infty}_{R^2}$

$= -q_{1*}\ 1/\pi * \tan^{-1}(\sqrt{x\text{-}R^2}/\sqrt{R^2\text{-}c^2})|^{\infty}_{R^2}$

$= -q_{1*}\ 1/\pi * [\ \tan^{-1}(\infty) - \tan^{-1}(0)\ ] = = -q_{1*}\ 1/\pi * (\pi/2 - 0) = -q_1/2$

But this is just on one side, so double the result and we have our answer

$Q_{iris} = -q_1$

I did this already somewhere else, but I cannot find it.

(2) for the disk:

For the disk problem with charge in plane of disk we have this charge induced onto on each side of the disk

$\sigma_{disk}(\mathbf{r}) = - q_1(1/(2\pi^2 r_1^2)) \sqrt{c^2-R^2} / \sqrt{R^2-\rho^2}$ // each side

$r_1^2 = (\rho^2 + c^2 - 2c\rho \cos\theta)$

The total charge on the disk is then this:

$$Q_{disk} = -q_1 * 1/(2\pi^2) * \sqrt{c^2-R^2} \int_0^R \rho d\rho \, (1/\sqrt{R^2 - \rho^2}) \int_0^{2\pi} d\theta \, 1/(\rho^2 + c^2 - 2c\rho \cos\theta)$$

The angular integral is same as last time but with sign change

$\int_0^{2\pi} d\theta \, 1/(\rho^2 + c^2 - 2c\rho \cos\theta) = 2\pi /(c^2-\rho^2)$ since $\rho < c$ for the disk

We then have

$$Q_{disk} = -q_1 * 1/\pi * \sqrt{c^2-R^2} \int_0^R \rho d\rho \, (1/\sqrt{R^2 - \rho^2})(1/(c^2-\rho^2))$$

$$= -q_1 * 1/\pi * \sqrt{c^2-R^2} * 1/2 * \int_0^{R^2} dx \, (1/\sqrt{R^2 - x})(1/(c^2-x))$$

Wolfram tells us

$$\int \frac{\frac{1}{\sqrt{r^2-x}}}{c^2-x} \, dx =$$

$$-\frac{2 \tan^{-1}\left(\frac{\sqrt{r^2-x}}{\sqrt{c^2-r^2}}\right)}{\sqrt{c^2-r^2}}$$

and this time no "processing" is required. We then have

$$Q_{disk} = -q_1 * 1/\pi * \sqrt{c^2-R^2} * 1/2 * (-1) * 1/\sqrt{c^2-R^2} * 2 [\tan^{-1}(0) - \tan^{-1}(R/\sqrt{c^2-R^2})]$$

$$= q_1 * 1/\pi * [- \tan^{-1}(R/\sqrt{c^2-R^2})]$$

$$= - q_1 (1/\pi) \tan^{-1}(R/\sqrt{c^2-R^2}) \quad \text{// on each side of the disk}$$

so double to get the whole disk with both sides

$$Q_{disk} = - q_1 (2/\pi) \tan^{-1}(R/\sqrt{c^2-R^2})$$

If we move the point charge just to the outside edge of the disk, we get $\tan^{-1}(\infty) = \pi/2$ and then we find that $Q_{disk} = - q_1$. This is one extreme. It seems intuitive, but I don't have knowledge of "charge next to an edge-on plane". As the point charge moves away from the edge, Q_{disk} decreases until it reaches 0. This is a 3-body problem (point charge with q_1, disk with Q_{disk}, great sphere with $- (q_1+Q_{disk})$ which we could study using the Green recip theorem as in Smythe Problem 40.

Appendix B: A non-useful application of The Chord Theorem to our Problem

First, here is the theorem stated and proved: (*Euclid's* Elements: Book 3, Proposition 35)

Theorem

Let CD and EF both be chords of the same circle.
Let CD and EF intersect at A.

Then $CA \cdot AD = EA \cdot AF$.

Proof

Join C with F and E with D, as shown in this diagram:

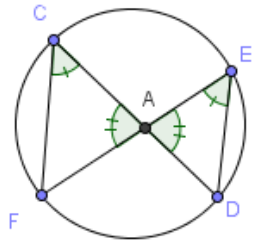

Then we have:

$\angle CAF \cong \angle EAD$ opposite angles
$\angle FCA \cong \angle DEA$ subtend the same arc

By AA similarity we have $\triangle FCA \sim \triangle DEA$.

Thus:

$$\frac{CA}{AF} = \frac{EA}{AD}$$
$$\implies CA \cdot AD = EA \cdot AF$$

■

This is the thing Kelvin and Kirk used with the bowl, but I am not sure it will be relevant here. Consider again our picture

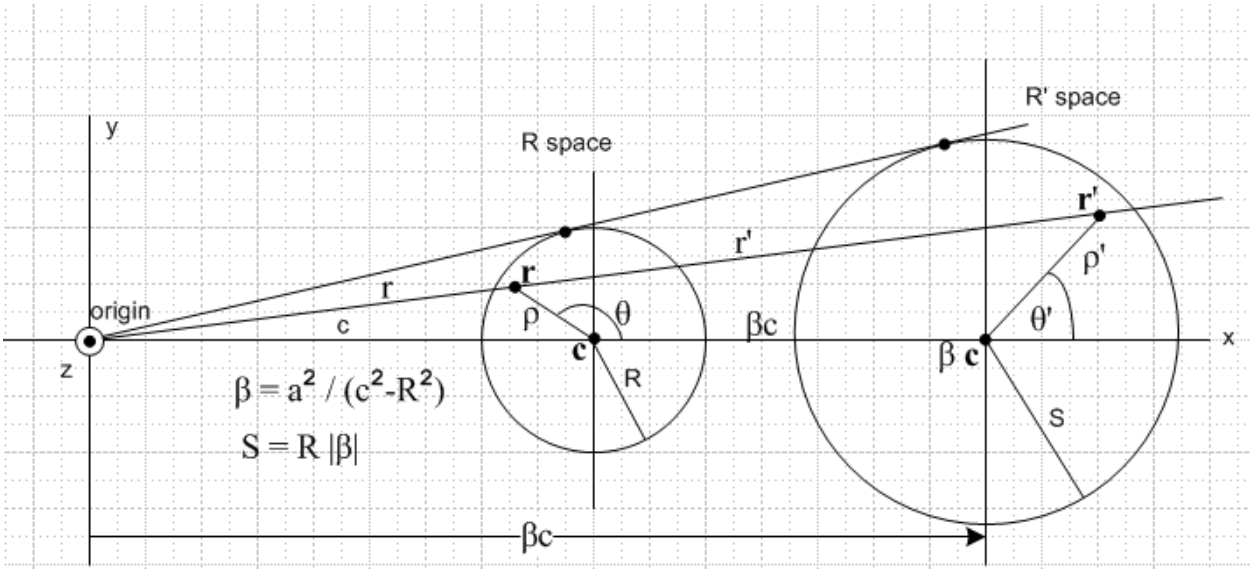

For the smaller circle let one chord be the diameter through **r** and **c,** and let the other chord be the vertical one through **r** which let us say has distance A above **r**, and distance y below **r**.

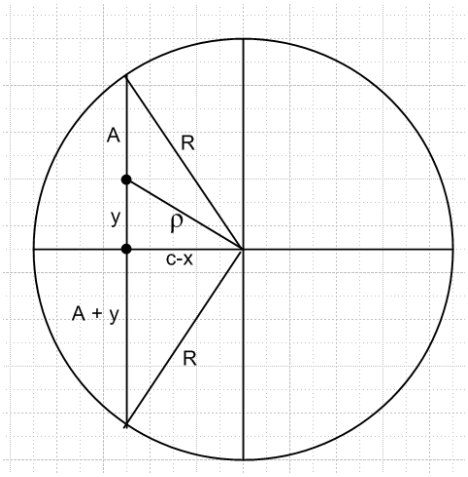

The chord theorem then says, with respect to these two chords,

$$(R-\rho)*(R+\rho) = A * (A+2y)$$

If we do the same thing in the larger circle on the right, with similar definitions, we get

$$(S-\rho')*(S+\rho') = A' * (A'+2y')$$

Dividing, we get

$$(R^2-\rho^2)/(S^2-\rho'^2) = (A/A')[\ (A+2y)/\ (A'+2y')]$$

I know from the Maple efforts above that

$$(R^2-\rho^2)/(S^2-\rho'^2) = (r/a)^2(1/\beta)$$

so I am now hoping to find some simple geometric way to show that

$$(A/A')\,[\,(A+2y)/\,(A'+2y')] = (r/a)^2(1/\beta)$$

We can apply the Chord Theorem *again* to find that

$$(A+y)^2 = R^2 - (c-x)^2$$
$$(A'+y')^2 = R'^2 - (c'-x')^2$$

and we can solve to get

$$A = -y + \sqrt{R^2 - (c-x)^2}$$
$$A' = -y' + \sqrt{R'^2 - (c'-x')^2}$$

so that

$$(A+2y) = y + \sqrt{R^2 - (c-x)^2}$$
$$(A'+2y') = y' + \sqrt{R'^2 - (c'-x')^2}$$

and therefore

$$A\,(A+2y) = [\,-y + \sqrt{R^2 - (c-x)^2}\,][\,y + \sqrt{R^2 - (c-x)^2}\,] = R^2 - (c-x)^2 - y^2$$

Thus, our left hand side becomes

$$(A/A')\,[\,(A+2y)/\,(A'+2y')] = [R^2 - (c-x)^2 - y^2]/[\,R'^2 - (c'-x')^2 - y'^2]$$

which at least is not *too* bad. So our task is to show that

$$[R^2 - (c-x)^2 - y^2] = (r/a)^2(1/\beta)\;[\,R'^2 - (c'-x')^2 - y'^2]$$

Maple confirms this is true, but I have to say, nothing useful in terms of geometric understanding has been added by this little appendix!

Appendix C: A Slippery Contradiction and its Resolution

From our picture above, we are tempted to argue that, from the inversion mapping, the following is true:

$$cc' = a^2$$

This is because, we argue, the point **c** maps into the point **c'** = β**c** . But this leads to the immediate contradiction ,

$a^2 = \beta c^2 = c^2\,(a^2/\,(c^2-R^2)$ => $1 = c^2/(c^2-R^2)$ => $R = 0$

Therefore, it must NOT be true that $cc' = a^2$ as we thought. Either that, or my calculation of β is wrong, though I just checked it now. But I thought you could take any ray from the inversion origin, say the ray going through **r** and **r'**, and the inversion mapping says that **r'** = (a^2/r^2) **r** so that $r' = a^2/r$ and $rr' = a^2$. We claim that the mapping of the small circle center is the large circle center, so **c'** = (a^2/c^2) **c** and $c' = a^2/c$ and then $cc' = a^2$. But this then leads to the contradiction.

Resolution: For a specific value of R, we have sphere surface maps into sphere surface. Notice that the center of the larger sphere is at $c' = \beta c = \beta(R)c$. Notice therefore that the center of this larger sphere *moves* to the left if we make R smaller. I failed to realize that fact, though I saw it in another context (sphere and plane). So here is a picture showing what happens to a set of concentric spheres in R space:

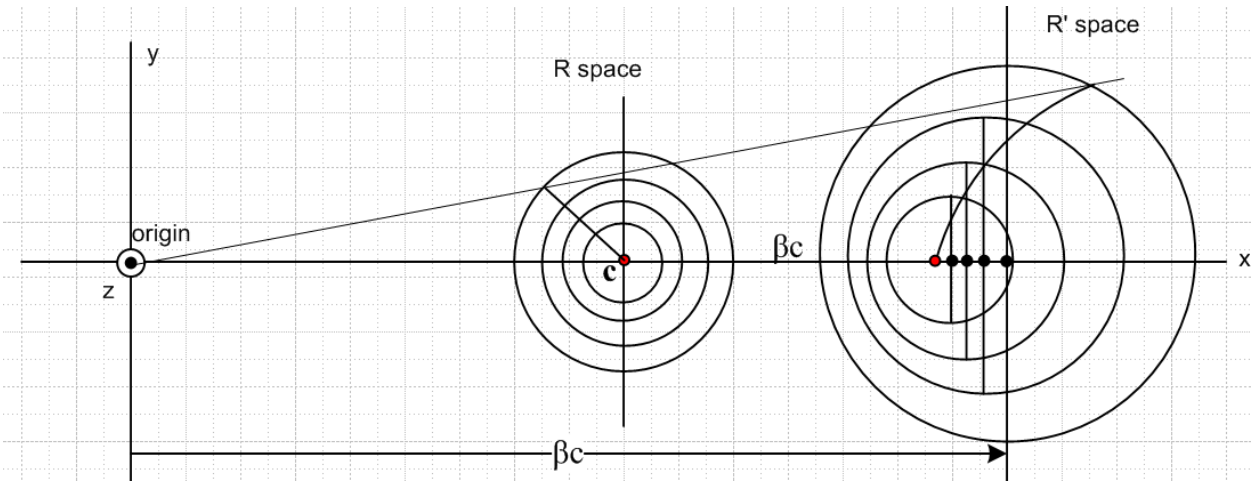

In the limit that R=0 in R space, $\beta \rightarrow (a/c)^2$ which is some number > 1 since we know a > c for our picture (the inversion circle must lie between the two spheres). You see on the right how **c'** moves to the left to a limiting value **c'** = $(a/c)^2$**c** as we shrink the spheres being mapped. On the left I show a radial segment. Since a plane maps into a sphere, this segment maps into a circular curve in R' space, and I have just taken a guess what this curve might look like. The main point is that the mapping therefore maps the center of the R space spheres into the red point in R' space, located at $(a/c)^2$ c, and this is NOT the center of the radius S sphere on the right.

Regarding **r** and **r'** and **r'** = (a^2/r^2) **r** under the mapping:

(1) If β means β(R), then the sphere of radius R on the left maps into the sphere of radius S on the right.
(2) interior maps to interior
(3) we are certainly allowed to pick a pair **r** and **r'** with **r'** = (a^2/r^2) **r** in the interior.
(4) we do NOT have **c'** = (a^2/c^2)**c** because **c** does not map into **c'** !

Appendix D: A better "front end" for this doc, to be used some rainy day.

Here is our proposed inversion picture, where we will have R space hold the charged disk and R' space will be our Green's function problem.

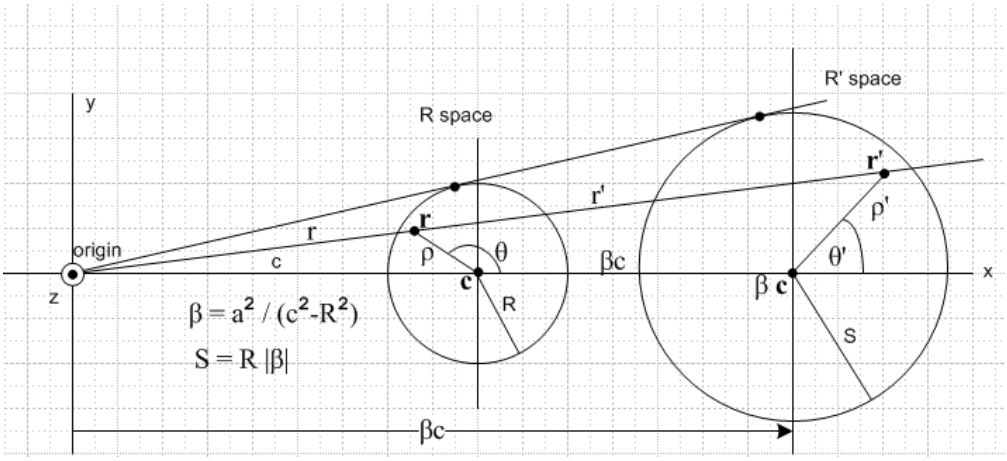

1. We start with the potential and charge on the charged disk in R space. We can translate Jackson's 3.178 as follows (our radius is R instead of a)

$$V_{\mathbf{disk}}(x,y,z) = (Q/R)\,\sin^{-1}\left[\ 2R \,/\, \left(\ \sqrt{(\rho-R)^2 + z^2}\ + \sqrt{(\rho+R)^2 + z^2}\ \right)\right] \qquad \rho = \sqrt{(x-c)^2 + y^2}$$

$$\sigma_{\mathbf{disk}}(x,y,z=0) = (Q/2\pi R) \,/\sqrt{R^2-\rho^2} \qquad \text{// sum of both sides}$$

2. Now we know that the potential on this charged disk in R space is

$$V = Q/C = Q/\left[\ (2/\pi)R\right] = (\pi/2)(Q/R)$$

so we want to add, in R space, the constant potential -V to bring the disk down to 0 potential. Therefore, this shall be our total potential in R space

$$\Phi(x,y,z) = (Q/R)\,\sin^{-1}\left[\ 2R \,/\, \left(\ \sqrt{(\rho-R)^2 + z^2}\ + \sqrt{(\rho+R)^2 + z^2}\ \right)\right] - (\pi/2)\,(Q/R)$$

3. We now look up in our Jackson inversion formulas doc ("formulas") and find that

$$\Phi'(\mathbf{r'}) = (a/r')\,\Phi(\mathbf{r}) = (r/a)\,\Phi(\mathbf{r})$$
$$\sigma'(\mathbf{r'}) = (a/r')^3\,\sigma(\mathbf{r}) = (r/a)^3\,\sigma(\mathbf{r})$$

where $\mathbf{r'} = (a^2/r^2)\mathbf{r}$ which implies $r' = a^2/r$ so that $(r'/a) = (a/r)$

So now we know the potential and charge in R' space:

$$\Phi'(\mathbf{r'}) = (a/r')\,\Phi(\mathbf{r}) = (a/r')\left[(Q/R)\,\sin^{-1}\left[\ 2R \,/\, \left(\ \sqrt{(\rho-R)^2 + z^2}\ + \sqrt{(\rho+R)^2 + z^2}\ \right)\right] - (\pi/2)\,(Q/R)\right.$$

$$\sigma'(\mathbf{r}') = (a/r')^3\,\sigma(\mathbf{r}) = (a/r')^3(Q/2\pi R)/\sqrt{R^2-\rho^2} \qquad \rho = \sqrt{(x-c)^2 + y^2}$$

We immediately do our usual combination in the potential and restate these results

$$\Phi'(\mathbf{r}') = (a/r')\,(Q/R)\cos^{-1}\left[\,2R \,/\, \left(\sqrt{(\rho-R)^2 + z^2} + \sqrt{(\rho+R)^2 + z^2}\,\right)\right]$$
$$\sigma'(\mathbf{r}') = (a/r')^3(1/2\pi)(Q/R)/\sqrt{R^2-\rho^2} \qquad \rho = \sqrt{(x-c)^2 + y^2}$$

4. As stated, these results apply to the Green's function for the R' space disk where the point charge is located c' to the left of disk center, and where the point charge size is a certain q' which we will now compute. If we look at the above Φ potential, we see that the constant part was $-(\pi/2)(Q/R)$ and in Φ' this becomes $-(\pi/2)(Q/R)(a/r') = q'/r'$. Therefore $q' = -a(\pi/2)(Q/R)$. But we want to rescale our problem so that this point charge is q_1 (just to make up a name). All we need to is multiply everything by

$$\text{factor} = q_1/\left[-a(\pi/2)\,(Q/R)\right] = -(2/\pi)(1/a)\,q_1(R/Q)$$

Doing this, we find (notice that both have correct units)

$$\Phi'(\mathbf{r}') = -2q_1/(\pi r')\,*\,\cos^{-1}\left[\,2R \,/\, \left(\sqrt{(\rho-R)^2 + z^2} + \sqrt{(\rho+R)^2 + z^2}\,\right)\right]$$
$$\sigma'(\mathbf{r}') = -a^2q_1/(\pi^2 r'^3) * 1/\sqrt{R^2-\rho^2}$$