Examples that once confused me. PhL 7.31.12

My frames doc is now pretty much complete, so I would like to do some commentary on these problems that *seemed so confusing* earlier. This stuff used to be at the end of the frames doc. Commentary in red.
// All DONE, all issues in this doc are resolved.

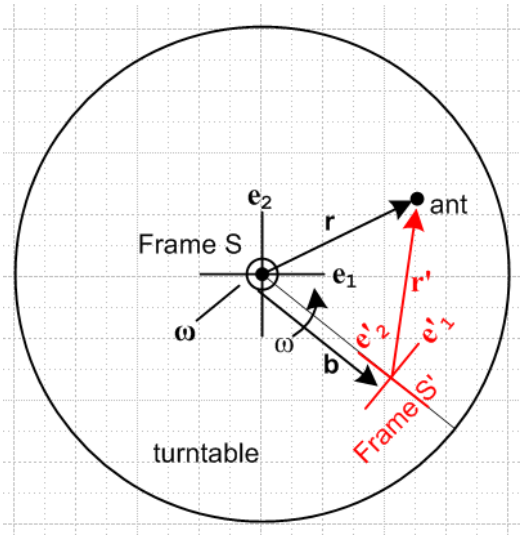

Example 1: Referring to Fig 1, suppose a Particle floats at rest at the origin of inertial Frame S. This means that we have **r** = 0, **v** = 0, **a** = 0, **L** = 0. What does an Observer within Frame S' see? The results are quite simple :

r' = **- b**
v' = **0**
a' = **0**
L' = **0**
$(d\mathbf{L}'/dt)_{S'} = 0$

In Frame S'. the Particle appears at location **r'** = **-b** and just sits there doing nothing as S' rotates. In Figure 1, Frame S' including the **b** vector rotates around the Frame S origin.

This is in my usual picture with b ≠ 0. Since ant sits at the S origin, he sits at **-b** in S' forever. No problem.

Example 2: Referring to Fig 1, suppose a Particle floats at rest at some point **r** = $\mathbf{r}_0$ in inertial Frame S. This means that we have **r** = $\mathbf{r}_0$, **v** = 0, **a** = 0, **L** = 0. What does an Observer within Frame S' see?

r = $\mathbf{r}_0$ // in this example, these things are always the same. (?? these things?)

r' = $\mathbf{r}_0$ **- b** // says **r'**(t) describes a circular motion which seems right.

$\mathbf{v}' = -\ \boldsymbol{\omega} \times \mathbf{r}_0$ // this seems wrong since it says $\mathbf{v}'$ = constant

$\mathbf{a}' = \boldsymbol{\omega} \times (\boldsymbol{\omega} \times \mathbf{r}_0) - \dot{\boldsymbol{\omega}} \times \mathbf{r}_0$

$\mathbf{L}' = -\mathbf{r}_0 \times \mathbf{b} - \mathbf{r}_0 \times (\boldsymbol{\omega} \times \mathbf{r}_0)$

$(d\mathbf{L}'/dt)_{S'} = -\boldsymbol{\omega} \times (\mathbf{r}_0 \times \mathbf{v}') - \mathbf{r}_0 \times (\dot{\boldsymbol{\omega}} \times \mathbf{r}_0) - \mathbf{b} \times \mathbf{a}'$

How can the Particle go in a circular motion in Frame S' and have a constant velocity??? Save for the next day. Must be something simple I hope. Could the whole inverse concept be wrong?

Resolution: Consider using theorem of (1.1) and (1.2) along with (15.2)

$\mathbf{r}_0 = (r_0)_i \mathbf{e}_i = (r_0)_i\ [\, R_z(-\varphi(t))\mathbf{e}'_i] = (r_0)_i\, R_z(\varphi(t))_{ij}\, \mathbf{e}'_j = (r_0)'_j\, \mathbf{e}'_j$

$\Rightarrow \quad (r_0)'_j = (r_0)_i\, R_z(\varphi(t))_{ij} = (r_0)'_j(t)$

This shows that if $(r_0)_j$ are constants, but $(r_0)'_j$ must be functions of time! So in $\mathbf{v}' = -\ \boldsymbol{\omega} \times \mathbf{r}_0$, it is true that if you *evaluate* this in Frame S, you do have $\mathbf{r}_0$ = constant and $\mathbf{v}'$ = constant. But when you evaluate this in Frame S', you find that your $(v')'_i$ are functions of time and in fact $\mathbf{v}'$ goes around in a circle. The strange fact that $\mathbf{v}'$ is a constant when evaluated in Frame S is the subject of the next long section and it is all correct.

Issue # 1: The Particle really does have the constant velocity direction shown as $\mathbf{v}' = -\ \boldsymbol{\omega} \times \mathbf{r}$

First, here is a picture showing Frame S' on our phono record at some time.

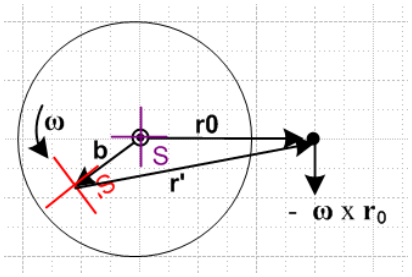

At some slightly later time, red frame S' is in a slightly new position. Here I draw these two adjacent positions and the fixed Particle dot



Now I take the second position and the dot and group them together, and then I rotate that group until the two red frames align,



You see that the black dot has in fact moved in the $-\boldsymbol{\omega} \times \mathbf{r}_0$ direction as the formula predicts. This will be true for any pair of adjacent red S' positions you pick around the circle. Let's repeat the experiment starting here:

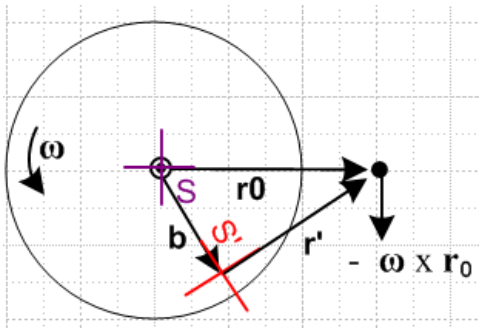



and we get the same result.

Issue # 2: Paths of the Particle.

After several *hours*, I am having a LOT of trouble with two simple questions:

(1) what does the path of the particle look like in Frame S ?
(2) what does the path of the particle look like in Frame S' ?

(1a) **r** in S (2a) **r** in S'
(1b) **r'** in S (2b) **r'** in S'

Next day: Phrases are not always clear. Question (1) could mean what is **r** in frame S, or it could mean what is **r'** in frame S. Here I will compute both of these:

(1a) Path of particle r in frame S

$\mathbf{r}$ (in frame S) = $\mathbf{r}_0$ = constant since $\mathbf{r} = r_i \mathbf{e}_i = r_o \mathbf{e}_1$ // case closed on this one!
// correct

(2a) Path of particle r in frame S'

Here I replicate the comment in the red "resolution" paragraph above.

Now from just-made doc "a simple theorem about basis vectors.doc" (phys/QM/ang mom) we know

$$\mathbf{e}'_n = R_z(\varphi)\mathbf{e}_n \quad \Rightarrow \quad \begin{pmatrix} \mathbf{e}'_1 \\ \mathbf{e}'_2 \end{pmatrix} = R_z(-\varphi) \begin{pmatrix} \mathbf{e}_1 \\ \mathbf{e}_2 \end{pmatrix} \quad \Rightarrow \quad \mathbf{e}'_n = R^{-1}(\varphi)_{nm}\, \mathbf{e}_m$$

or

$$\mathbf{e}'_1 = \cos\varphi\, \mathbf{e}_1 + \sin\varphi\, \mathbf{e}_2$$
$$\mathbf{e}'_2 = -\sin\varphi\, \mathbf{e}_1 + \cos\varphi\, \mathbf{e}_2$$

Therefore expand **r** in frame S'

$\mathbf{r} = r'_n \mathbf{e}'_n$ where $r'_n = \mathbf{r} \bullet \mathbf{e}'_n$ so that

$$r'_1 = x' = \mathbf{r} \bullet (\cos\varphi\, \mathbf{e}_1 + \sin\varphi\, \mathbf{e}_2) = r_o \mathbf{e}_1 \bullet (\cos\varphi\, \mathbf{e}_1 + \sin\varphi\, \mathbf{e}_2) = r_o \cos\varphi$$
$$r'_2 = y' = \mathbf{r} \bullet (-\sin\varphi\, \mathbf{e}_1 + \cos\varphi\, \mathbf{e}_2) = r_o \mathbf{e}_1 \bullet (-\sin\varphi\, \mathbf{e}_1 + \cos\varphi\, \mathbf{e}_2) = -r_o \sin\varphi$$

So we seem to get

$$x' = r_o \cos\varphi = r'_1$$
$$y' = -r_o \sin\varphi = r'_2$$

This shows that the path of **r** in frame S' is a circle as shown on the right below
[it shows **r** as seen from Frame S' but with tail of **r** translated to S' origin, a strange picture.]
[a better version of this right side picture appears below]

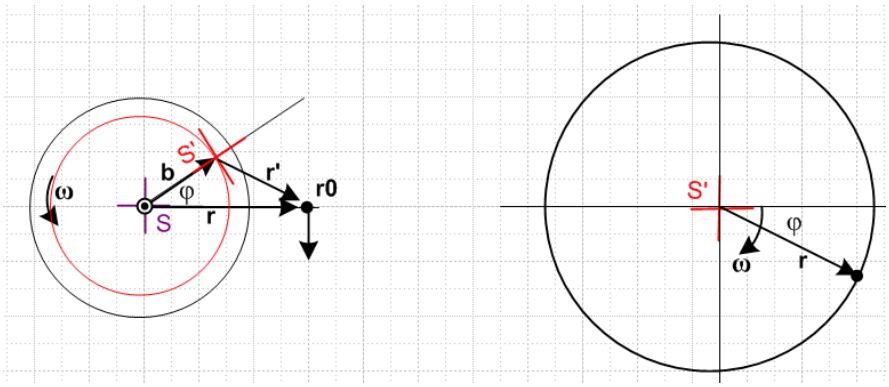

You can see that the two pictures "agree". On the right of course the tail of **r** has been pinned to the frame S' origin. On the right in frame S' the vector r rotations CW, whereas on the left frame S' rotates CCW.

Comment: Since $\mathbf{r} = \mathbf{r}_0$ always, the picture on the right shows that $\mathbf{r}_0$ is NOT a constant vector when viewed from frame S'. It rotates! [correct] So when I had $\mathbf{v}' = -\ \boldsymbol{\omega} \times \mathbf{r}_0$ and was worried that this seemed odd since the RHS is a constant, well, RHS is NOT a constant viewed from frame S'. [correct]

(1b) Path of vector r' in frame S

We now that $\mathbf{r} = \mathbf{b} + \mathbf{r}'$ and therefore

$$\mathbf{r}' = \mathbf{r} - \mathbf{b}$$

The Frame S components of both sides are

$$(\mathbf{r}')_i = (\mathbf{r})_i - (\mathbf{b})_i$$

But we know from (1a) that $\mathbf{r} = r_o \mathbf{e}_1$

$$(\mathbf{r})_i = r_o \delta_{i,1}$$

And we know that $\mathbf{b} = bR(\varphi)\mathbf{e}_1$ so $(b)_i = bR_{ij}(\mathbf{e}_1)_j = bR_{i1}$

$$(\mathbf{r}')_i = r_o \delta_{i,1} - bR_{i1}$$

Write these out explicitly to get

$$(\mathbf{r}')_1 = r_0 - R_{11} = r_0 - b\cos\varphi$$
$$(\mathbf{r}')_2 = 0 - R_{21} = -b\sin\varphi$$

which says for $\mathbf{r}' = (r')_i \mathbf{e}_i = x_i \mathbf{e}_i$ for a graph

$x = r_0 - b\cos\varphi$
$y = -b\sin\varphi$

Here is a picture of this situation [see only picture on left which shows r' in Frame S. The picture on the right may not make any sense at all, I seem to have translated r' from the left...]

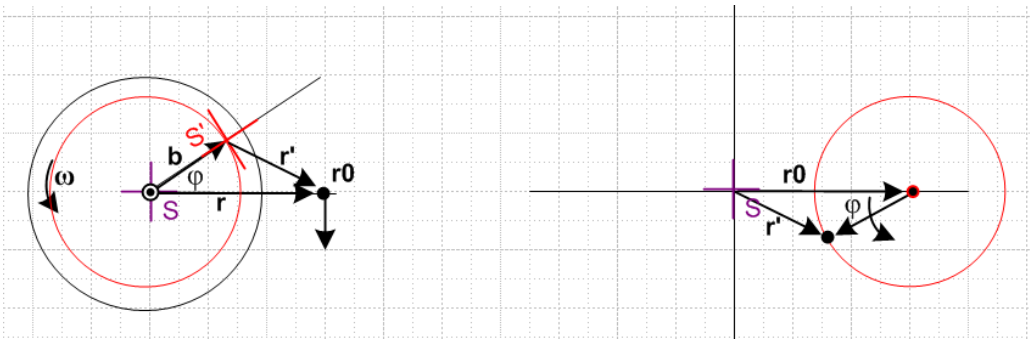

Again the figures make sense. The vector **r'** always points to the right in frame S.

(2b) Path of particle r' in frame S'

The expansion here may be taken as

$\mathbf{r}' = (r')'_i \mathbf{e}'_i$ where $(r')'_i = \mathbf{r}' \bullet \mathbf{e}'_i$

so we have

$(r')'_i = \mathbf{r}' \bullet \mathbf{e}'_i = (\mathbf{r} - \mathbf{b}) \bullet \mathbf{e}'_i = \mathbf{r} \bullet \mathbf{e}'_i - \mathbf{b} \bullet \mathbf{e}'_i = (r)'_i - (b)'_i$

Now we compute from above [at this time I had $\mathbf{b} = b\mathbf{e}'_1$; later it became $\mathbf{b} = -b\,\mathbf{e}'_2$ because earlier I had the picture shown above, and later I changed to the picture shown in frame doc]

$\mathbf{b} = bR(\varphi)\mathbf{e}_1 = bR(\varphi)\,R^{-1}(\varphi)\,\mathbf{e}'_1 = b\,\mathbf{e}'_1$

and this agrees with the picture notion that from frame S', **b** always points to the right. Thus

$\mathbf{b} \bullet \mathbf{e}'_i = b\,\mathbf{e}'_1 \bullet \mathbf{e}'_i = b\,\delta_{1,i} = (b)'_i$

And we found earlier that

$x' = r_o\cos\varphi = (r)'_1$
$y' = -r_o\sin\varphi = (r)'_2$

Therefore we find that

$(r')'_1 = (r)'_1 - (b)'_1 = r_o\cos\varphi - b$

$(r')'_2 = (r)'_2 - (b)'_2 = - r_o \sin\varphi$

or for purposes of plotting

$x' = r_o \cos\varphi - b$
$y' = - r_o \sin\varphi$

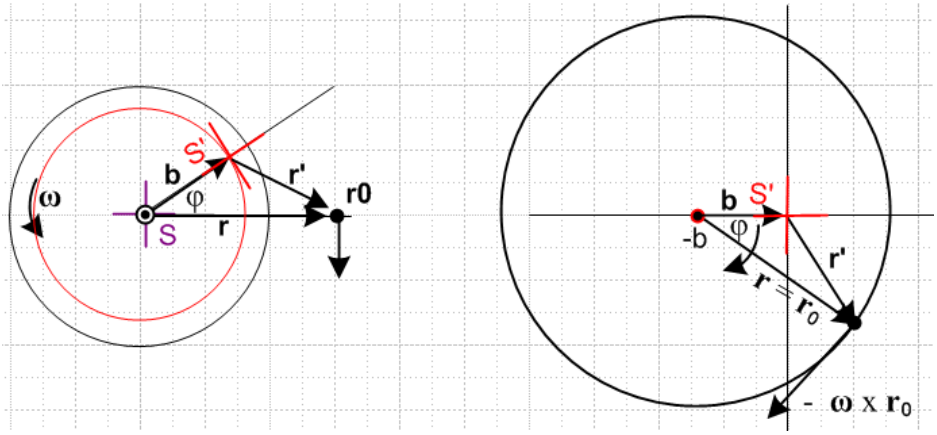

and again (finally!) the picture makes sense. Note that **ω** points out of the plane of paper in all pictures.

Comment: The picture on the right shows what the vectors **r** and **r'** look like viewed from Frame S'.
[correct. The "trajectory" is the circle whether you think or r or r'.]

Now we can face this question: How can we have **v'** always pointing down in frame S, **v'** = - **ω** x $\mathbf{r}_0$,
[well, I later showed how this works in a section above.]

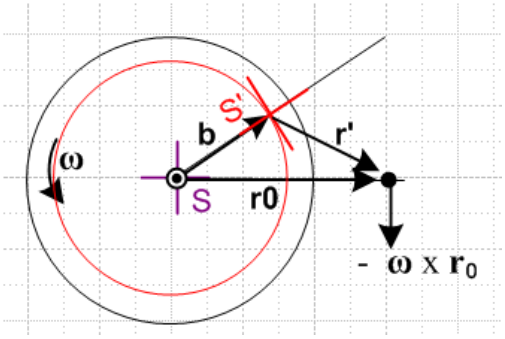

while at the same time the particle goes around in a circle. We need to ponder the meaning of **v'** a bit:

v' = - **ω** x $\mathbf{r}_0$

If we look at this in frame S', the useful picture is the big circle on the right above, and in that picture you see that the vector - $\boldsymbol{\omega}$ x $\mathbf{r}_0$ is in a perfectly reasonable direction to be the velocity of the particle going around in a circle. [correct] Looking at vector **v'** in Frame S is a "cross" view that is not very convenient.

Now here is perhaps the confusing picture. We had this picture showing **r'** in frame S

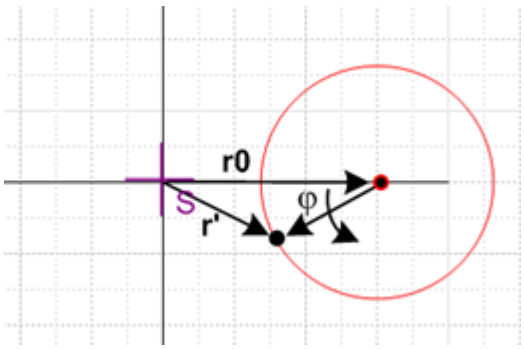

Frame S

The thing that appears to be a velocity in this picture is really $(d\mathbf{r}'/dt)_S = \mathbf{v}'_S$ and this is not the same as $\mathbf{v}' = (d\mathbf{r}'/dt)_{S'} = \mathbf{v}'_{S'}$ and the difference is the G rule term! So if you want to have position and velocity "make sense", you need to plot them both in their natural frames, and that is what the large circle picture on the right above is doing. [see perhaps this is what that picture on the right above meant]

****

(2b) Vector r' as seen in frame S'

[This seems to be a second version of (2b) -- we just did this above in a first version.]

Now from just-made doc "a simple theorem about basis vectors.doc" (phys/QM/ang mom) we know

$$\mathbf{e}'_n = R_z(\varphi)\mathbf{e}_n \quad \Rightarrow \quad \begin{pmatrix} \mathbf{e}'_1 \\ \mathbf{e}'_2 \end{pmatrix} = R_z(-\varphi)\begin{pmatrix} \mathbf{e}_1 \\ \mathbf{e}_2 \end{pmatrix} \quad \Rightarrow \quad \mathbf{e}'_n = R^{-1}(\varphi)_{nm}\,\mathbf{e}_m$$

or

$$\mathbf{e}'_1 = \cos\varphi\,\mathbf{e}_1 + \sin\varphi\,\mathbf{e}_2$$
$$\mathbf{e}'_2 = -\sin\varphi\,\mathbf{e}_1 + \cos\varphi\,\mathbf{e}_2$$

Therefore expand **r'** in frame S'

$$\mathbf{r}' = (r')'_n\mathbf{e}'_n \qquad \text{where } (r')'_n = \mathbf{r}' \bullet \mathbf{e}'_n \quad \text{so that}$$

$$(r')'_1 = \mathbf{r}' \bullet \mathbf{e}'_1 = (\mathbf{r}_0 - \mathbf{b}) \bullet \mathbf{e}'_1 = \mathbf{r}_0 \bullet \mathbf{e}'_1 - \mathbf{b} \bullet \mathbf{e}'_1 = (r_0\mathbf{e}_1) \bullet \mathbf{e}'_1 - b$$
$$= (r_0\mathbf{e}_1) \bullet (\cos\varphi\,\mathbf{e}_1 + \sin\varphi\,\mathbf{e}_2) - b = r_0\cos\varphi - b$$

$$(r')'_2 = \mathbf{r}' \bullet \mathbf{e}'_2 = (\mathbf{r}_0 - \mathbf{b}) \bullet \mathbf{e}'_2 = \mathbf{r}_0 \bullet \mathbf{e}'_2 - \mathbf{b} \bullet \mathbf{e}'_2 = (r_0\mathbf{e}_1) \bullet \mathbf{e}'_2$$
$$= (r_0\mathbf{e}_1) \bullet (-\sin\varphi\,\mathbf{e}_1 + \cos\varphi\,\mathbf{e}_2) - b = -r_o\sin\varphi$$

So we end up then with

$(r')'_1 = -b + r_0\cos\varphi$

$(r')'_2 = -r_o\sin\varphi$ [same as in previous version]

And here is the picture

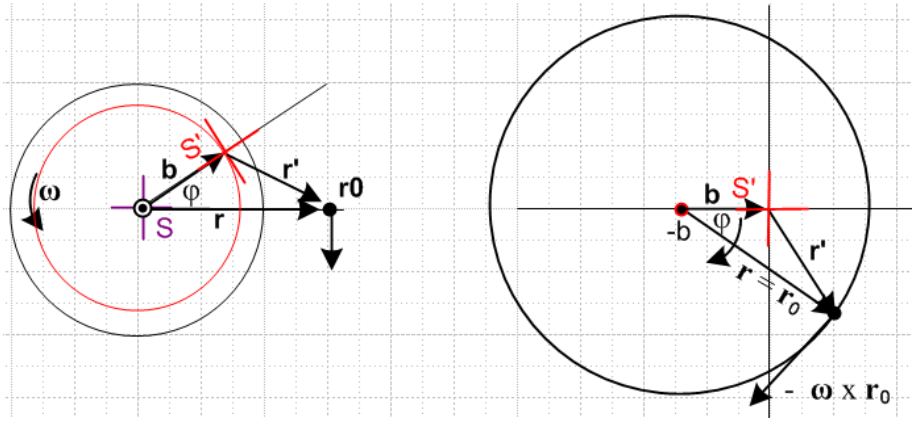

[same]

and again the picture makes sense. Note that **ω** points out of the plane of paper in all pictures. This picture on the right shows BOTH the vector **r'** as seen in S', and the vector **r** as seen in S'. I am totally happy with how these two pictures show the same thing for both these vectors.

(2a) Path of particle r in frame S'

[This is a second version of (2a) which appears above.]

Since $\mathbf{r}' = \mathbf{r}_0 - \mathbf{b}$ and $\mathbf{r} = \mathbf{r}_0$ we write $\mathbf{r}' = \mathbf{r} - \mathbf{b}$ and then $\mathbf{r} = \mathbf{r}' + \mathbf{b}$. That means, evaluating on the $\mathbf{e}'_i$

$(r)'_i = (r')'_i + (b)'_i$

and we just look at the two cases

$(r)'_1 = (r')'_1 + (b)'_1 = -b + r_0\cos\varphi + b = r_0\cos\varphi$

$(r)'_2 = (r')'_2 + (b)'_2 = -r_o\sin\varphi + 0 = -r_0\sin\varphi$ [same as in first version above]

=> $\mathbf{r} = (r_0\cos\varphi)\mathbf{e}'_1 + (-r_0\sin\varphi)\,\mathbf{e}'_2$

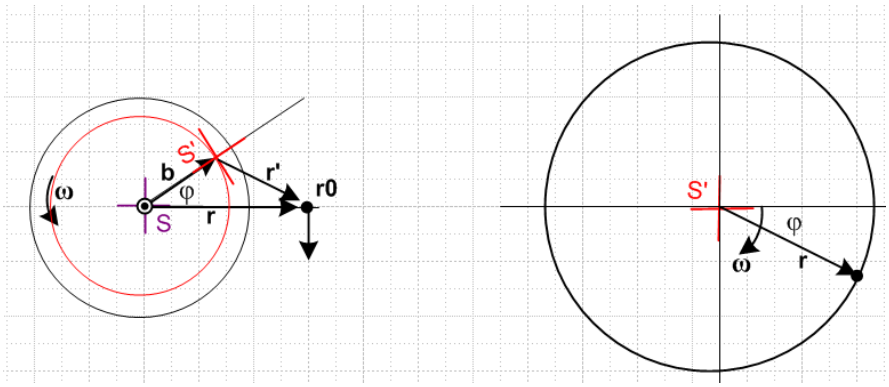

This continues to bother me. Does the picture on the right really show **r** as viewed from S' ? It shows the orientation of **r** correctly, it just does not show the tail position correctly. [it is a cross picture!]

Well go back to the starting point which is **r** = **r'** + **b** . If have **r'** as shown on the right side of the previous picture, and if we add **b** to every point on that locus, we get the locus shown here for **r**, there is no avoiding this fact. We also then have **r** = (r)'$_i$**e**'$_i$ which means tail at origin.

Start once again with **r** = **r'** + **b** . *If* we expand each vector like so:

(r)'$_i$**e**'$_i$ = (r')'$_i$**e**'$_i$ + (b)'$_i$**e**'$_i$

then we conclude that

(r)'$_i$ = (r')'$_i$ + (b)'$_i$

So we have *already* put **r** = (r)'$_i$**e**'$_i$ into the stew which means we have already put **r** tail at origin.

Instead of doing this, start again with **r** = **r'** + **b** . We found the trajectory of **r'** assuming its tail is at the S' origin, Then notice that this picture shows **r** = **r'** + **b** so this then gives the path of r without putting the tail of **r** at the origin.

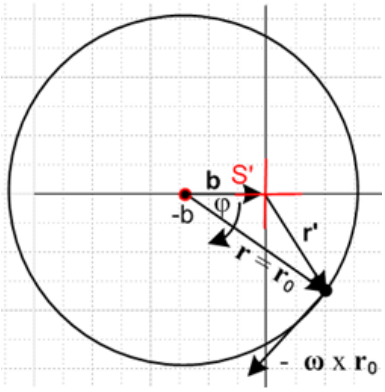

Comments after the fact

I had trouble when I plotted **r'** in frame S or **r** in frame S' because these are "cross pictures" where I shifted the tail of the vector to make it be at the origin:

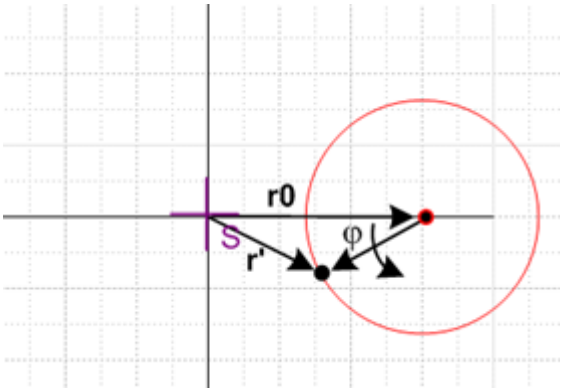

This plots **r'** in Frame S with tail of r' shifted to origin of S. $(d\mathbf{r}'/dt)_S = \mathbf{v}'_S$

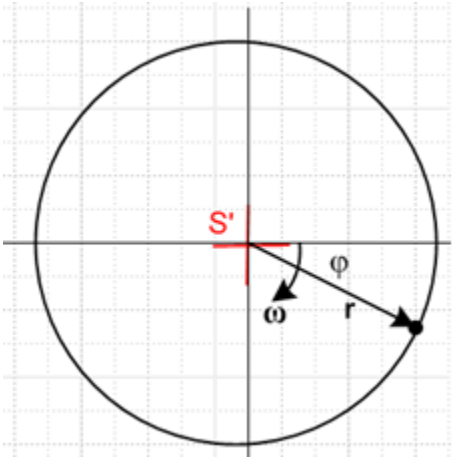

This plots **r** in Frame S' with tail of **r** shifted origin of S' $(d\mathbf{r}/dt)_{S'} = \mathbf{v}_{S'}$

I think these plots are OK, but you have to realize that in each case, the velocity of the arrow tip is a cross velocity. At the time I wrote this doc, I did not understand the notion of cross velocities or accelerations and the notation was hazy.

This is what got me interested in the question "when are two vectors equal".