How to apply frames doc to the Earth tides problem.

In the gimbals situation, the vector **b** is not soldered to Frame S'. My entire frames doc never considers this possibility! Well, I guess really this would be a case of ω = 0 where ω is that of frames doc. Therefore I will use Ω below.

This situation can be regarded as Special Case #2 with ω = 0 and axes aligned. I have this completely general result valid in the general case.

$$m\mathbf{a}' = \mathbf{F}'_{\mathtt{eff}} = \mathbf{F} - m\ddot{\mathbf{b}}_{\mathtt{S}} - m\boldsymbol{\omega} \times (\boldsymbol{\omega} \times \mathbf{r}') - 2m\,\boldsymbol{\omega} \times \mathbf{v}' - m\dot{\boldsymbol{\omega}} \times \mathbf{r}' \qquad (8.4a)$$

For Special Case 2 *with* $\boldsymbol{\omega} = 0$ and $\dot{\boldsymbol{\omega}} = 0$ this says

$$m\mathbf{a}' = \mathbf{F}'_{\mathtt{eff}} = \mathbf{F} - m\ddot{\mathbf{b}}_{\mathtt{S}} \qquad \textit{(8.4a)'}$$

For the tide on earth case, we know that

$\ddot{\mathbf{b}}_{\mathtt{S}} = -\Omega^2 b\hat{\mathbf{r}}$ // the change is always to the center

Therefore

$$m\mathbf{a}' = \mathbf{F}'_{\mathtt{eff}} = \mathbf{F} + m\,\Omega^2 b\hat{\mathbf{r}}$$

where for a particle of mass m at the center of the earth,

$$\mathbf{F} = -GM_1 m/r_{12}^2\,\hat{\mathbf{r}}$$

Meanwhile, we have, for any particle at rest on the earth, $\mathbf{a}' = 0$ in Frame S'. Then

$$m\mathbf{a}' = \mathbf{F}'_{\mathtt{eff}} = -GM_1 m/r_{12}^2\,\hat{\mathbf{r}} + m\,\Omega^2 b\hat{\mathbf{r}} = 0$$

and we get our basic result that

$$m\,\Omega^2 b = GM_1 m/r_{12}^2$$

We can then go on to consider particles at other locations on the Earth as Butikov does. Here is my gimbals Fame S' picture

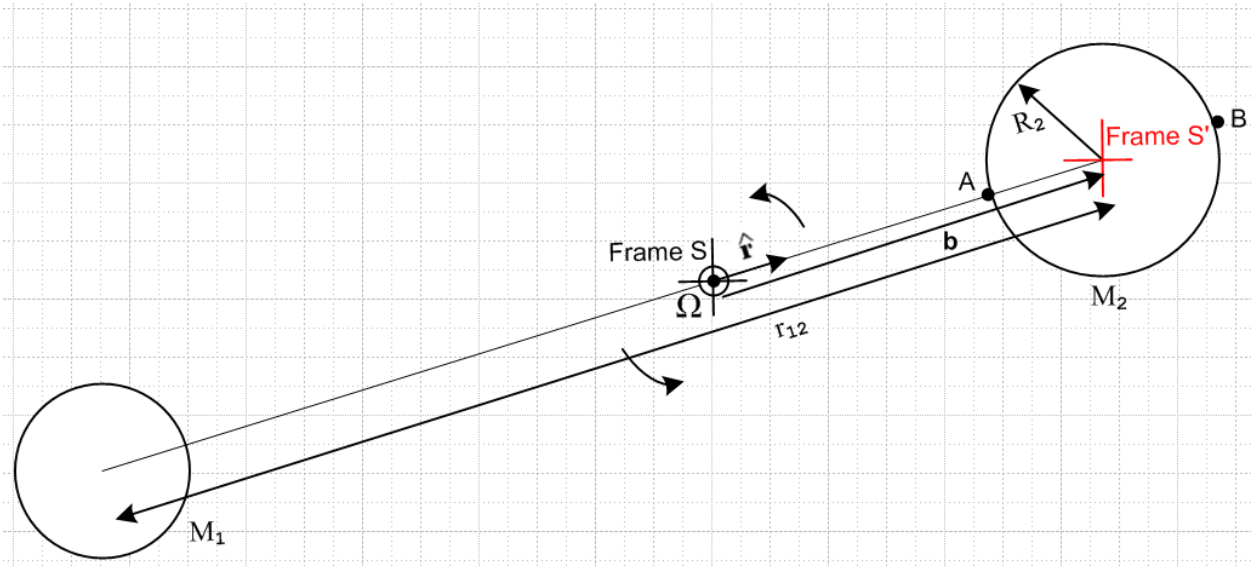
R_2
Frame S'
B
A
Frame S
$\hat{\mathbf{r}}$
b
Ω
r_{12}
M_2
M_1
