App C_5 retired on 2/2/14 at 8:30 PM PhL 3.26.05

This is another copy of my original wrong section, this is probably the newest version.

C.5 The DC internal inductance of a thin ribbon wire

The ribbon or strip geometry is as follows, where we assume J_z is uniform and total current is I :

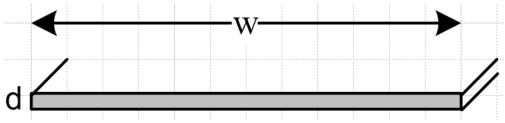

Fig C.6

We also assume w >> d so we can ignore end effects. The figure below is an end view of the flat conductor rotated to a vertical position, but only a central segment of the conductor is shown.

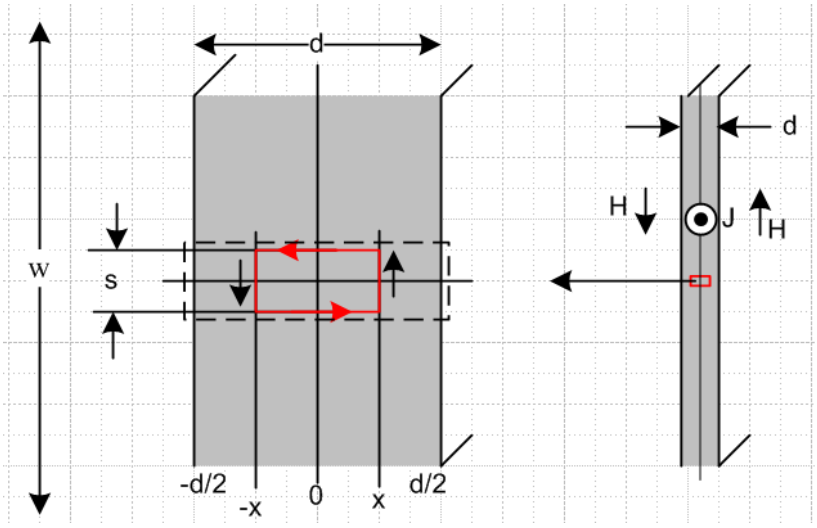

Fig C.7

The uniform current density J_z is out of the plane of paper as shown on the right. Based on Fig C.2 we expect the H field to have the directions shown on the right, both inside and not far away outside the surface of the conductor.

The current density is given by I/area,

$$J_z = I/(wd) \; . \qquad \text{(C.5.1)}$$

Applying Ampere's Law to the red loop one finds

$$\int_S \mathbf{J} \bullet d\mathbf{S} = \oint_C \mathbf{H} \bullet d\mathbf{s} \qquad \textit{(1.1.37)}$$

so

$$J_z \, 2x \; s = 2H(x) \; s \; \Rightarrow \qquad H(x) = J_z x = Ix/(wd) \qquad H/I = x/(wd) \qquad \text{(C.5.2)}$$

To get the internal inductance we compute its contribution from the dotted rectangle, then multiply by (w/s) to get L_i for the entire strip. So using (C.3.6)

$$L_i = (w/s)\,\mu \int_{dotted} dS\,(H/I)^2 = (w/s)\,\mu \int_{dotted} (sdx)\,[x/(wd)]^2$$

$$= (w/s)\,\mu\, s\, (wd)^{-2} \int_{-d/2}^{d/2} dx\; x^2 = (w/s)\,\mu\, s\, (wd)^{-2}\, 2 \int_{0}^{d/2} dx\; x^2$$

$$= (w/s)\,\mu\, s\, (wd)^{-2}\, 2\, (1/3)\, (d/2)^3 = w^{-1}\,\mu\, d^{-2}\, (2/3)\, d^3/8$$

$$= (1/12)\,\mu\,(d/w) = (\mu_i/8\pi)\,[\,2\pi/3\,(d/w)\,] \qquad \text{// strip } w>>d \qquad \text{(C.5.3)}$$

For some reason, this is 1/2 the value which appears in Holloway and Kuester equation (25).