Appendix D : The General E and B Fields Inside an Infinite Straight Round Wire

This Appendix presents a rather lengthy calculation of the fields and currents inside a round wire *without* the Chapter 2 assumption that such fields and currents are symmetrical about the axis. This wire is regarded as one conductor of an infinite transmission line down which a wave is propagating.

Since this Appendix is quite long, a brief summary is in order (see also Table of Contents) :

Section D.1

(a) A longitudinal traveling wave form $\mathbf{E}(r,\theta,z,t) = e^{j(\omega t - kz)}\,\mathbf{E}(r,\theta)$ is assumed inside the round wire and $\mathbf{E}(r,\theta,z,t)$ is then shown to satisfy a certain vector Helmholtz equation.

(b) The field $\mathbf{E}(r,\theta)$ and the surface charge $n(\theta)$ are both expanded onto "azimuthal partial waves" $e^{jm\theta}$ with coefficients $\mathbf{E}(r,m)$ and N_m.

(c) The Helmholtz equation's vector Laplacian $\nabla^2 \equiv \nabla^2$ is stated in cylindrical coordinates.

(d) The three Helmholtz component equations and div $\mathbf{E} = 0$ are written out in these coordinates.

Section D.2

(a),(b),(c): The z and r Helmholtz equations and the div $\mathbf{E} = 0$ equation are solved for E_z, then E_r, and then E_θ. These solutions are expressed in terms of Bessel J functions of a complex argument and two unknown constants a_m and K_m for each partial wave.

(d) a boundary condition relating E_r to surface charge density $n(\theta)$ is derived (see D.9 below)

(e) this and another boundary condition $E_\theta(a,m) = 0$ (see D.8 below) are used to evaluate a_m and K_m and then the solution **E** field components are stated in box (D.2.33).

Section D.3

It is noted that the boxed **E** field solutions also satisfy the ignored third θ Helmholtz equation.

Section D.4

The **B** fields are computed from the **E** fields using Maxwell $-j\omega\mathbf{B} = \text{curl}\ \mathbf{E}$, and then box (D.4.9) summarizes both the **E** and **B** partial wave fields inside a round wire.

Section D.5 These **E** and **B** fields are shown to exactly solve the other three Maxwell equations.

Section D.6 The $m = 0$ partial wave results are stated and compared to the results of Chapter 2.

Section D.7 The problem of finding an exterior field solution for the round wire is discussed.

Section D.8 Arguments supporting the second boundary condition $E_\theta(a,m) = 0$ are presented.

Section D.9 The "charge pumping boundary condition" is discussed in relation to surface currents.

Section D.10 High frequency limits of the round wire E fields are presented.

Section D.11 Low frequency limits of the round wire E fields are presented, including losses.

D.1 Partial Wave Expansion

Warning: In this appendix, we use the same function name **E** to represent three *different* functions,

$\mathbf{E}(r,\theta,z,t)$ $\mathbf{E}(r,\theta)$ $\mathbf{E}(r,m)$

The functions are distinguished by the arguments shown, and if they are not shown, the general context of the discussion will indicate which function is implied. The symbol **E** is thus "overloaded".

(a) The General Method

The starting point for the calculation is the damped wave equation (1.3.36, region 2) for the **E** field inside the wire. Unsubscripted parameters refer to properties of the wire.

$$(\nabla^2 - \mu\varepsilon\,\partial_t^2 - \mu\sigma\partial_t)\mathbf{E}(r,\theta,z,t) = 0\ . \qquad (1.3.36)$$

Cylindrical coordinates (r,θ,z) are used, as appropriate for an infinite straight round wire. Recall that the damping term arises when the driving current **J** on the right of (1.2.1) is replaced by Ohm's Law $\mathbf{J} = \sigma\mathbf{E}$.

We now make the ansatz that a solution to the above wave equation may be expressed in the following form where the t and z dependence is exposed and where $\mathbf{E}(r,\theta)$ is a complex function to be determined:

$$\mathbf{E}(r,\theta,z,t) = e^{j(\omega t - kz)}\,\mathbf{E}(r,\theta)\ . \qquad (D.1.1)$$

The idea here is that we take our round wire to be one of two conductors of a transmission line (the other wire may or may not have a round cross section). The form shown in (D.1.1) says that the E field inside our round wire is assumed (an Ansatz!) to be a simple "traveling wave" moving down this transmission line in the +z direction. As this interior wave moves down the line, we expect to have an exterior wave whose E field takes the same general form shown in (D.1.1). If we match the E and B field boundary conditions of the interior and exterior waves, we expect k to have the same value on both sides of the round wire boundary.

About k

For a lossless wave, we expect the conductors to simply deform the exterior fields (for example, causing the E field to be perpendicular to the conductor surfaces), but we expect the exterior wave to travel at the speed of light in the dielectric, with no "drag" from the conductors. In this lossless case, we then expect to have $k = \omega\sqrt{\mu_d\varepsilon_d} = \omega/v_d$ where v_d is the speed of light in the dielectric. If the dielectric conducts but the conductors are perfect, we have instead $k = \omega\sqrt{\mu_d\xi_d}$ and then k has a negative imaginary part which causes decay along the line, but k is still a characteristic of the dielectric medium. In these two cases we write k as β_d elsewhere in this document, though officially $\beta_d = \omega\sqrt{\mu_d\xi_d}$ as shown in (1.5.1).

However, if the conductors are not perfect, then they too contribute to the decay, and in this case we expect that our parameter k will no longer be a characteristic just of the dielectric. For example, we expect it will depend on R, the resistance per unit length of the conductors.

We shall continue to use the generic parameter k throughout this appendix, to make sure our theory can handle situations with loss. One should think of k as a general complex parameter which (hopefully) has a negative imaginary part and whose real part is the wave phase velocity. Only in the special case of a completely lossless line do we have $k = \omega/v_d = \beta_d$.

In the strong and extreme skin effect regimes, Chapter 4 develops a *formula* for the parameter k based on Maxwell's equations. This formula states that $k = -j\sqrt{(R+j\omega L)(G+j\omega C)}$. This same formula arises in the network model of Appendix K, but in *that* model the formula applies all the way down to $\omega = 0$. Probably this extrapolation of the Maxwell-derived k expression down to low frequencies is reasonable though not exact. Having remarked on these two models for k, we shall ignore them until we reach Appendix D.11 and continue to work with our generic parameter k.

When (D.1.1) is put into the above wave equation (1.3.36), time derivatives can be replaced $\partial_t \rightarrow j\omega$ with the result

$$(\nabla^2 + \beta^2)\,\mathbf{E}(r,\theta,z,t) = 0 \qquad \text{(D.1.2a)}$$

or

$$[\nabla_{2D}^2 + (\beta^2 - k^2)]\,\mathbf{E}(r,\theta) = 0 \qquad \nabla^2 = \nabla_{2D}^2 + \partial_z^2 \qquad \text{(D.1.2b)}$$

where

$$\beta^2 = \mu\varepsilon\omega^2 - j\omega\mu\sigma = \omega^2\mu\,(\varepsilon - j\sigma/\omega) = \omega^2\mu\,\xi \qquad \xi \equiv \varepsilon - j\sigma/\omega \quad . \qquad \textit{(1.5.1)}$$

We could have defined the temporal Fourier Transform of $\mathbf{E}(r,\theta,z,t)$,

$$\mathbf{E}\hat{}(r,\theta,z,\omega') \equiv FT\{\,\mathbf{E}(r,\theta,z,t),\,\omega'\} = e^{-jkz}\,\mathbf{E}(r,\theta)\,2\pi\delta(\omega-\omega') = e^{-j\omega t}\,\mathbf{E}(r,\theta,z,t)\,2\pi\delta(\omega-\omega')$$

as in (1.6.11) and then (D.1.2a) would be valid as well for $\mathbf{E}\hat{}(r,\theta,z,\omega)$ which would be a more conventional Helmholtz equation, but since $\mathbf{E}(r,\theta,z,t)$ is monochromatic, we leave (D.1.2a) as is.

One can regard (D.1.1) as an assumed variable-separated form for a solution, an "ansatz". If a consistent solution to the Maxwell equations can be found with this assumption, it is justified *de facto*.

Sign Convention Comment: Section 1.6 discusses the Fourier Transform (1.6.8) where $e^{+j\omega t}$ appears in the expansion formula. For $\mathbf{E}\hat{}(\mathbf{x},\omega) = 2\pi\delta(\omega-\omega_1)$ one gets $\mathbf{E}(\mathbf{x},t) = e^{+j\omega_1 t}$ and then the form of a wave solution is $e^{+j(\omega t - kz)}$ with the + sign associated with ωt. In general, EE people like to assume time dependence of the form $e^{+j\omega t}$ (and they prefer j in place of i for $\sqrt{-1}$). The Fourier Transform is of course valid with the other sign choice for the two exponentials, and for that other sign choice one would have $\mathbf{E}\hat{}(\mathbf{x},\omega) = 2\pi\delta(\omega-\omega_1) \Rightarrow \mathbf{E}(\mathbf{x},t) = e^{-j\omega_1 t}$ and one would think of a wave as $e^{-j(\omega t - kz)} = e^{+j(kz-\omega t)}$. This sign convention is common in many physics texts [e.g. Jackson (7.8)], but in this document we use the $e^{+j(\omega t - kz)}$ convention usually used in EE texts [e.g. Haus-Melcher 13.1 (7)]. Jackson suggests a physics/EE conversion algorithm of $i \leftrightarrow -j$. It is all just a convention choice and, as in (1.6.6), only the

sign of the imaginary physical field under consideration is affected. If one thinks of the physical field under consideration as Re{**E**(**x**,t)}, the sign convention choice makes no difference at all.

(b) Partial Wave Expansions

The next step is to do a "partial wave expansion" (that is, a complex Fourier series expansion) of **E**(r,θ) in terms of "azimuthal harmonics" $e^{jm\theta}$, so that the variable θ is replaced with the partial wave index m:

$$\mathbf{E}(r,\theta) = \sum_{m=-\infty}^{\infty} \mathbf{E}(r,m)\, e^{jm\theta} \qquad \text{// expansion} \qquad \text{(D.1.3a)}$$

$$\mathbf{E}(r,m) = (1/2\pi) \int_{-\pi}^{\pi} d\theta\, \mathbf{E}(r,\theta)\, e^{-jm\theta} \quad . \qquad \text{// projection} \qquad \text{(D.1.3b)}$$

In analogy with (D.1.1) we define a surface charge density n(θ,z,t) which has the following ansatz variable-separated form,

$$n(\theta,z,t) = e^{j(\omega t - kz)}\, n(\theta) \; . \qquad \text{(D.1.4)}$$

We then expand n(θ) as in (D.1.3),

$$n(\theta) = \sum_{m=-\infty}^{\infty} N_m\, e^{jm\theta} \qquad \text{// Coul/m}^2 \qquad \text{(D.1.5a)}$$

$$N_m = (1/2\pi) \int_{-\pi}^{\pi} d\theta\, n(\theta)\, e^{-jm\theta} \quad . \qquad \text{// Coul/m}^2 \qquad \text{(D.1.5b)}$$

N_m is the "moment" of the surface charge distribution in the mth partial wave. As with **E**(r,θ), the function n(θ) is also a function of implicit arguments ω and k.

In principle, n(θ) could have a phase which varies with θ. If we momenarily assume this is not the case and assume that n(θ) is real, then (D.1.5b) says $N_{-m} = N_m^*$ and then

$$n(\theta) = \sum_{m=-\infty}^{\infty} N_m\, e^{jm\theta} = N_0 + \sum_{m=1}^{\infty} [\, N_m\, e^{jm\theta} + N_m^*\, e^{-jm\theta}\,] = N_0 + 2 \sum_{m=1}^{\infty} \mathrm{Re}\{\, N_m\, e^{jm\theta}\}$$

$$= N_0 + 2 \sum_{m=1}^{\infty} \{\, \mathrm{Re}(N_m)\cos(m\theta) - \mathrm{Im}(N_m)\sin(m\theta)\,\} \; . \qquad \text{(D.1.6)}$$

If we furthermore assume that n(θ) is an even function of θ, as symmetry implies for our particular figure below, then (D.1.5b) says the N_m are real and then we have

$$n(\theta) = N_0 + 2 \sum_{m=1}^{\infty} N_m \cos(m\theta) \; . \qquad \text{// n(θ) real and even in θ} \qquad \text{(D.1.7)}$$

For a moderately closely spaced twin lead transmission line (we allow for different radii), one might expect the m=0 and m=1 partial waves to be dominant :

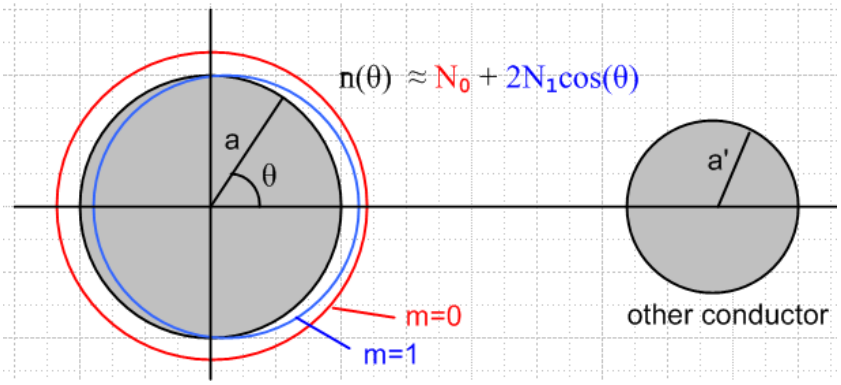

Fig D.1

Notice that

$$N_0 = (1/2\pi) \int_{-\pi}^{\pi} d\theta\, n(\theta) = (1/2\pi)\,(1/a)(1/dz) \int_{-\pi}^{\pi} [a\,d\theta\,dz]\, n(\theta) = (1/2\pi)\,(1/a)(1/dz)\, Q$$

where Q is the total charge on a thin ribbon (width) dz wrapping the round wire. In (4.3.8) we refer to the quantity Q/dz as q(0), where $q(z) = q(0)\, e^{jkz}$ = the total charge on the wire per unit length. Thus,

$$N_0 = (1/2\pi a)\, q(0) \qquad \text{(D.1.8)}$$

(c) The Vector Laplacian in Cylindrical Coordinates

Given the following cylindrical-coordinates field components,

$$\mathbf{E}(r,\theta,z,t) = E_r(r,\theta,z,t)\hat{\mathbf{r}} + E_\theta(r,\theta,z,t)\hat{\boldsymbol{\theta}} + E_z(r,\theta,z,t)\hat{\mathbf{z}}$$

we may write out our ansatz wave form (D.1.1) and the Helmholtz equation (D.1.2a) in more detail,

$$\begin{aligned}
&E_r(r,\theta,z,t) = e^{j(\omega t - kz)}\, E_r(r,\theta) . && [\nabla^2\mathbf{E}(r,\theta,z,t)]_r + \beta^2 E_r(r,\theta,z,t) = 0 \\
&E_\theta(r,\theta,z,t) = e^{j(\omega t - kz)}\, E_\theta(r,\theta) . && [\nabla^2\mathbf{E}(r,\theta,z,t)]_\theta + \beta^2 E_\theta(r,\theta,z,t) = 0 \\
&E_z(r,\theta,z,t) = e^{j(\omega t - kz)}\, E_z(r,\theta) . && [\nabla^2\mathbf{E}(r,\theta,z,t)]_z + \beta^2 E_z(r,\theta,z,t) = 0 .
\end{aligned} \qquad \text{(D.1.9)}$$

where β^2 is the Helmholtz parameter of the conductor medium, not to be confused with k.

In Cartesian coordinates, it happens that $[\nabla^2\mathbf{E}]_i = \nabla^2(E_i)$, but this is not generally true for curvilinear coordinates. In cylindrical coordinates, it is true for the z coordinate only. The operator ∇^2 when applied to a vector field is called "the vector Laplacian" and it is very different from the scalar Laplacian, so much so that some authors (Moon and Spencer) replace $[\nabla^2\mathbf{E}]$ by $[\nabla\nabla\mathbf{E}]$ which is defined in this manner

$$[\nabla\nabla\mathbf{E}] \equiv [\nabla^2\mathbf{E}] \equiv \text{grad}(\text{div}\,\mathbf{E}) - \text{curl}\,(\text{curl}\,\mathbf{E}) = \nabla(\nabla\bullet\mathbf{E}) - \nabla \times (\nabla \times \mathbf{E}) \qquad \text{(D.1.10)}$$

whereas

$$\nabla^2\varphi \equiv \text{div}(\text{grad}\,\varphi) = \nabla\bullet(\nabla\varphi) . \qquad \text{(D.1.11)}$$

It is the *vector* Laplacian that appears in our Helmholtz equation (D.1.2). For cylindrical coordinates it turns out that,

$$\begin{aligned}
(\nabla^2\mathbf{E})_r &= \nabla^2 E_r - (2/r^2)\,\partial_\theta E_\theta - (1/r^2)\,E_r \\
(\nabla^2\mathbf{E})_\theta &= \nabla^2 E_\theta + (2/r^2)\,\partial_\theta E_r - (1/r^2)\,E_\theta \\
(\nabla^2\mathbf{E})_z &= \nabla^2 E_z
\end{aligned} \qquad \text{(D.1.12)}$$

where ∇^2 is the scalar Laplacian, given in cylindrical coordinates by

$$\nabla^2 = (1/r)\partial_r(r\partial_r) + (1/r^2)\partial_\theta^2 + \partial_z^2 = \partial_r^2 + (1/r)\partial_r + (1/r^2)\partial_\theta^2 + \partial_z^2 . \qquad \text{(D.1.13)}$$

Notice in (D.1.12) that E_θ is mixed into the "r equation" and E_r is mixed into the "θ equation".

See for example Morse and Feshbach Vol I p 116, Moon and Spencer p 139, or do a web search on "vector Laplacian". The author's *Tensor Analysis* document, Sections 13, 14 and 15, derives these results for arbitrary coordinate systems. Here is a summary of vector differential operators in cylindrical coordinates taken from Morse and Feshbach, where the last line corresponds to the above discussion:

$$\text{grad } \psi = \mathbf{a}_r \frac{\partial \psi}{\partial r} + \mathbf{a}_\phi \frac{1}{r}\frac{\partial \psi}{\partial \phi} + \mathbf{a}_z \frac{\partial \psi}{\partial z}$$

$$\text{div } \mathbf{A} = \frac{1}{r}\frac{\partial}{\partial r}(rA_r) + \frac{1}{r}\frac{\partial A_\phi}{\partial \phi} + \frac{\partial A_z}{\partial z}$$

$$\text{curl } \mathbf{A} = \mathbf{a}_r\left(\frac{1}{r}\frac{\partial A_z}{\partial \phi} - \frac{\partial A_\phi}{\partial z}\right) + \mathbf{a}_\phi\left(\frac{\partial A_r}{\partial z} - \frac{\partial A_z}{\partial r}\right) + \mathbf{a}_z\left(\frac{1}{r}\frac{\partial}{\partial r}rA_\phi - \frac{1}{r}\frac{\partial A_r}{\partial \phi}\right)$$

$$\nabla^2\psi = \frac{1}{r}\frac{\partial}{\partial r}\left(r\frac{\partial \psi}{\partial r}\right) + \frac{1}{r^2}\frac{\partial^2 \psi}{\partial \phi^2} + \frac{\partial^2 \psi}{\partial z^2}$$

$$\nabla^2\mathbf{A} = \mathbf{a}_r\left[\nabla^2 A_r - \frac{A_r}{r^2} - \frac{2}{r^2}\frac{\partial A_\phi}{\partial \phi}\right] + \mathbf{a}_\phi\left[\nabla^2 A_\phi - \frac{A_\phi}{r^2} + \frac{2}{r^2}\frac{\partial A_r}{\partial \phi}\right] + \mathbf{a}_z\nabla^2 A_z \qquad \text{(D.1.14)}$$

We use θ for azimuth instead of their φ since φ is our scalar potential.

Using the ansatz form (D.1.1) and partial wave expansions of the form (D.1.3) or (D.1.5), it is a simple matter to convert an equation containing the above differential operators and involving components like $E_i(r,\theta,z,t)$ or $n(\theta,z,t)$ to a simpler equation involving components like $E_i(r,m)$ and N_m and this will be done below.

(d) The three Helmholtz equations and div E = 0 (in partial waves)

1. The z equation: The E_z Helmholtz Equation from (D.1.9) is $[\nabla^2\mathbf{E}]_z + \beta^2 E_z = 0$.

Using (D.1.12) and (D.1.13), the E_z equation may be written,

$$[\partial_r^2 + (1/r)\,\partial_r + (1/r^2)\,\partial_\theta^2 + \partial_z^2 + \beta^2\ ]\, e^{j(\omega t - kz)} E_z(r,\theta) = 0\ . \qquad (1)$$

Inserting the expansion (D.1.3) for $E_z(r,\theta)$ and moving the m sum to the left gives

$$\sum_{m=-\infty}^{\infty} [\partial_r^2 + (1/r)\,\partial_r + (1/r^2)\,\partial_\theta^2 + \partial_z^2 + \beta^2\ ]\, e^{j(\omega t - kz)} E_z(r,m)\, e^{jm\theta} = 0\ . \qquad (2)$$

We can then make the obvious replacements $\partial_z = -jk$ and $\partial_\theta = +jm$ to get,

$$\sum_{m=-\infty}^{\infty} \{\, [\partial_r^2 + (1/r)\,\partial_r - m^2\,(1/r^2) - k^2 + \beta^2\ ]\, e^{j(\omega t - kz)} E_z(r,m)\,\}\, e^{jm\theta} = 0\ . \qquad (3)$$

Due to the completeness of functions $e^{jm\theta}$ on the interval $(-\pi.\pi)$, we conclude that $\{\ \} = 0$, or

$$[\partial_r^2 + (1/r)\,\partial_r - m^2\,(1/r^2) - k^2 + \beta^2\ ]\, e^{j(\omega t - kz)} E_z(r,m) \ = \ 0\ . \qquad (4)$$

Alternatively one can apply $\int_{-\pi}^{\pi} d\theta\, e^{-jm'\theta}$ to both sides of (3), use the orthogonality property

$$\int_{-\pi}^{\pi} d\theta\, e^{j(m-m')\theta} = 2\pi\, \delta_{m,m'} \ , \qquad (5)$$

and then change m' to m to get (4).

Next, multiply both sides of (4) by $r^2\, e^{-j(\omega t - kz)}$ to get,

$$[r^2\partial_r^2 + r\,\partial_r - m^2 + r^2(\beta^2 - k^2)]\, E_z(r,m) = 0 \ . \qquad (D.1.15)$$

We may then write these rules for converting equation (1) to equation (D.1.15)

Conversion Rules: $\partial_z \rightarrow -jk$ $\quad \partial_t \rightarrow +j\omega$

$\partial_\theta \rightarrow +jm$ $\quad f(r,\theta,z,t) \rightarrow f(r,m)$ $\qquad (D.1.16)$

We can now practice with these rules to convert various other equations of interest. A field with unstated arguments has the full arguments (r,θ,z,t).

2. The r equation: The E_r Helmholtz Equation from (D.1.9) is $[\nabla^2\mathbf{E}]_r + \beta^2 E_r = 0$.

Using (D.1.12) we find,

$$\nabla^2(E_r) - (2/r^2)\,\partial_\theta E_\theta - (1/r^2)\,E_r + \beta^2 E_r = 0$$

$$[\partial_r^2 + (1/r)\partial_r + (1/r^2)\partial_\theta^2 + \partial_z^2]\,E_r - (2/r^2)\,\partial_\theta E_\theta - (1/r^2)\,E_r + \beta^2 E_r = 0$$

$$[\partial_r^2 + (1/r)\partial_r + (1/r^2)\partial_\theta^2 + \partial_z^2 - (1/r^2) + \beta^2]\,E_r - (2/r^2)\,\partial_\theta E_\theta = 0 \ .$$

Now apply the conversion rules to get

$$[\partial_r^2 + (1/r)\partial_r + (1/r^2)\,(-m^2) - k^2 - (1/r^2) + \beta^2]\,E_r(r,m) - (2/r^2)\,jm\,E_\theta(r,m) = 0 \ .$$

Group like terms and multiply by r^2 to get

$$[r^2\partial_r^2 + r\partial_r - (m^2+1) + r^2(\beta^2-k^2)]\,E_r(r,m) - 2jm\,E_\theta(r,m) = 0 \ . \qquad (D.1.17)$$

3. The θ equation: The E_θ Helmholtz Equation from (D.1.9) is $[\nabla^2\mathbf{E}]_\theta + \beta^2 E_\theta = 0$.

Using (D.1.12) we find,

$$\nabla^2(E_\theta) + (2/r^2)\,\partial_\theta E_r - (1/r^2)\,E_\theta + \beta^2 E_\theta = 0$$

$$[\partial_r^2 + (1/r)\partial_r + (1/r^2)\partial_\theta^2 + \partial_z^2]\,E_\theta + (2/r^2)\,\partial_\theta E_r - (1/r^2)\,E_\theta + \beta^2 E_\theta = 0$$

$$[\partial_r^2 + (1/r)\partial_r + (1/r^2)\partial_\theta^2 + \partial_z^2 - (1/r^2) + \beta^2]\,E_\theta + (2/r^2)\,\partial_\theta E_r = 0 \ .$$

Now apply the conversion rules to get

$$[\partial_r^2 + (1/r)\partial_r + (1/r^2)(-m^2) + (-k^2) - (1/r^2) + \beta^2]\, E_\theta(r,m) + (2/r^2)\, jm\, E_r(r,m) = 0 \ .$$

Group like terms and multiply by r^2 to get

$$[r^2\partial_r^2 + r\partial_r - (m^2+1) + r^2(\beta^2-k^2)]\, E_\theta(r,m) + 2jmE_r(r,m) = 0 \ . \qquad \text{(D.1.18)}$$

4. The divE = 0 equation: Using (D.1.14) for div **E** (times r) we write div **E** = 0 as

$$\partial_r (r\, E_r) + \partial_\theta E_\theta + r\, \partial_z E_z = 0 \ .$$

Applying the conversion rules gives

$$\partial_r [r\, E_r(r,m)] + jmE_\theta(r,m) + r\,(-jk)E_z(r,m) = 0$$

or

$$[1 + r\partial_r]\, E_r(r,m) + jmE_\theta(r,m) + r\,(-jk)E_z(r,m) = 0 \quad . \qquad \text{(D.1.19)}$$

Here then is a summary of the above four results:

The Three Helmholtz Equations and the div E = 0 equation (in partial waves) (D.1.20)

$[\nabla^2\mathbf{E}]_z + \beta^2 E_z = 0$:

$$[r^2\partial_r^2 + r\,\partial_r - m^2 + r^2(\beta^2 - k^2)]\, E_z(r,m) = 0 \qquad \textit{(D.1.15)}$$

$[\nabla^2\mathbf{E}]_r + \beta^2 E_r = 0$:

$$[r^2\partial_r^2 + r\partial_r - (m^2+1) + r^2(\beta^2-k^2)]\, E_r(r,m) - 2jm\, E_\theta(r,m) = 0 \qquad \textit{(D.1.17)}$$

$[\nabla^2\mathbf{E}]_\theta + \beta^2 E_\theta = 0$:

$$[r^2\partial_r^2 + r\partial_r - (m^2+1) + r^2(\beta^2-k^2)]\, E_\theta(r,m) + 2jmE_r(r,m) = 0 \qquad \textit{(D.1.18)}$$

div **E** = 0 :

$$\partial_r [r\, E_r(r,m)] + jmE_\theta(r,m) - jk\, r\, E_z(r,m) = 0 \qquad \textit{(D.1.19)}$$

Helmholtz Comments: The *scalar* Helmholtz equation $(\nabla^2+\beta^2)u(r,\theta,z) = 0$ is fully separable in cylindrical coordinates and the "harmonics" (we call them atomic forms) are as follows

$$[\, J_m(\beta' r),\, Y_m(\beta' r)] * [e^{jm\theta},\, e^{-jm\theta}] * [e^{jkz},\, e^{-jkz}] \qquad \text{(D.1.21)}$$

where k is a free real parameter and where $\beta'^2 = \beta^2 - k^2$. Here we use parameter names relevant for our particular problem where $u = E_z$. These atomic forms appear for example in Moon and Spencer p15 with $\beta = \kappa$, $m = p$, $\beta' = iq$, $\alpha_2 = m^2$, and $-\alpha_3 = \beta'^2$. Whether a parameter like m or β' is real, imaginary or

complex depends on the nature of the problem, and the above is a standard atoms choice for problems of our type. The θ "quantum number" m is quantized to be an integer by the fact that our problem region is the entire range (-π,π) for θ and the solution must be single valued in θ. Our k is a parameter determined for a lossless line by $k = \omega\sqrt{\mu_d \varepsilon_d}$ and is thus correlated with the selected frequency ω, whereas our parameter β is always complex as in (1.5.1). In general, in any list of atomic forms like that shown above, two of the three atoms will be oscillatory and the third will be exponential, and in our case $J_m(\beta' r)$ is the exponential one, hence the skin effect with its exponential damping as shown in (2.3.7). Away from a singular point, any solution to $(\nabla^2 + \beta^2)u(r,\theta,z) = 0$ must be writable as a linear combination of the atoms, so

$$u = \int dk \, \Sigma_m \, [A_{k,m} J_m(\beta' r) + B_{k,m} Y_m(\beta' r)] \, [C_{k,m} e^{jm\theta} + D_{k,m} e^{-jm\theta}] \, [E_{k,m} e^{jkz} + F_{k,m} e^{-jkz}].$$

A general solution method is to find a subset of the above most-general form that is appropriate in each "region" of the problem, and then to match boundary conditions between regions. If the problem is well-posed, this will determine all the constants A,B,C,D,E,F. We refer to this solution method as "the method of Smythian forms" (Smythe used this method a lot). Often many of these constants are 0.

In contrast, the *vector* Helmholtz equation is NOT separable in cylindrical coordinates (see Moon and Spencer p 139), it is not even "R-separable", so there are no associated "harmonics" as there are with the scalar Helmholtz equation.. Nevertheless, the functions $e^{jm\theta}$ form a complete set for θ in (-π,π) and our expansion of each E_i onto these $e^{jm\theta}$ is certainly allowed, even though these $e^{jm\theta}$ are not part of any associated harmonics for the vector Helmholtz equation.

However, in Cartesian coordinates each Helmholtz component equation *is* a scalar Helmholtz equation. In cylindrical coordinates z is a Cartesian coordinate, so we should not be surprised when we find below that $E_z \sim J_m(\beta' r) \, e^{im\theta} \, e^{-jkz}$ and this fits into the general form noted above. Neither E_r nor E_θ will have such a form.

D.2 Solutions for E_z, E_r and E_θ

(a) The E_z Solution

As shown in (D.1.15), the Helmholtz equation for $E_z(r,m)$ is

$$[r^2 \partial_r^2 + r \, \partial_r + (r^2 \beta'^2 - m^2)] \, E_z(r,m) = 0 \qquad \text{(D.2.1)}$$

where

$$\beta'^2 = \beta^2 - k^2 \ . \qquad \text{(D.2.2)}$$

In a conductor like copper, |β| is very large compared to the lossless value $k = \beta_d$, so we *could* ignore the distinction between β and β' in that lossless case. To show this, recall from (1.5.1) that

$$\beta_d^2 = \omega^2 \mu_d \varepsilon_d \qquad \beta^2 \approx -j\omega\mu\sigma \qquad \Rightarrow \qquad \left| \frac{\beta^2}{\beta_d^2} \right| \approx \frac{\mu}{\mu_d} \, \frac{\sigma}{\omega \varepsilon_d} \, .$$

In scale, μ and μ_d are about the same, so using numbers from (1.1.28) and (1.1.29),

$$\left|\frac{\beta^2}{\beta_d^2}\right| \approx \frac{\sigma}{\omega\varepsilon_d} = \frac{5.81 \times 10^7}{2\pi f\, 8.85 \times 10^{-12}} \approx \frac{10^{18}}{f(Hz)} = \frac{10^9}{f(GHz)}$$

$$\left|\frac{\beta}{\beta_d}\right| \approx \frac{3.2 \times 10^4}{\sqrt{f(GHz)}}$$

For f = 100 GHz we then find that $|\beta/\beta_d| \approx 3200$, so for f < 100 GHz, $|\beta/\beta_d| > 3200$.

As noted earlier, we maintain k as a general complex parameter to be able to handle situations with loss, and thus we maintain the distinction between β and β' in all that follows.

Setting $x = \beta' r$ one finds $\partial_r = \beta' \partial_x$ and then $r\partial_r = x\partial_x$ and so on so that (D.2.1) reads

$$[x^2\partial_x^2 + x\,\partial_x + (x^2 - m^2)]\, E_z(x/\beta', m) = 0 . \qquad x = \beta' r \qquad \text{(D.2.3)}$$

This is Bessel's equation [Spiegel 24.1] and the solution subject to the condition that E_z be finite at r = 0 is $E_z(x/\beta', m) = C_{zm} J_m(x)$ or

$$E_z(r,m) = C_{zm} J_m(\beta' r) \qquad \text{(D.2.4)}$$

where C_{zm} is an arbitrary constant for each partial wave m.

For m = 0, equation (D.2.4) is consistent with (2.2.22) found by other means. In Section 2.1 we dealt only with the m=0 partial wave, which embodies the symmetrical part of the problem.

(b) The E_r Solution

As shown in (D.1.17), the Helmholtz equation for $E_r(r,m)$ is, using (D.2.2),

$$[r^2\partial_r^2 + r\partial_r - (m^2+1) + r^2\beta'^2]\, E_r(r,m) - 2jm\, E_\theta(r,m) = 0 \qquad \text{(D.2.5)}$$

while the div **E** = 0 condition was stated in (D.1.19) as

$$[1 + r\partial_r]\, E_r(r,m) + jmE_\theta(r,m) + r(-jk)E_z(r,m) = 0$$

or

$$-jmE_\theta(r,m) = [1 + r\partial_r]\, E_r(r,m) - r(jk)E_z(r,m) . \qquad \text{(D.2.6)}$$

Inserting this into (D.2.5) gives

$$[r^2\partial_r^2 + r\partial_r - (m^2+1) + r^2\beta'^2]\, E_r(r,m) + [2 + 2r\partial_r]\, E_r(r,m) - 2r(jk)E_z(r,m) = 0$$

or

$$[r^2\partial_r^2 + 3r\partial_r + (1-m^2) + r^2\beta'^2]\, E_r(r,m) = 2r(jk)E_z(r,m) . \qquad \text{(D.2.7)}$$

Inserting solution (D.2.4) for $E_z(r,m)$ this becomes

$$[r^2\partial_r^2 + 3r\partial_r + (1-m^2) + r^2\,\beta'^2]\,E_r(r,m) = 2r\,(jk)\,C_{zm}\,J_m(\beta' r)$$

or

$$[r^2\partial_r^2 + 3r\partial_r + (1-m^2) + r^2\,\beta'^2]\,E_r(r,m) = 2j\,(k/\beta')\,C_{zm}\,\beta'\,r\,J_m(\beta' r)$$

or

$$[r^2\partial_r^2 + 3r\partial_r + (1-m^2) + r^2\,\beta'^2]\,E_r(r,m) = K_m\,\beta' r\,J_m(\beta' r) \qquad \text{(D.2.8)}$$

where

$$K_m \equiv 2j\,(k/\beta')\,C_{zm}\,. \qquad \text{(D.2.9)}$$

In order to get the left side of (D.2.8) into something recognizable, we define

$$E_r(r,m) = x^{-1}\,F_m(x) \qquad \text{(D.2.10)}$$

where x is a dimensionless radial variable which will play a major role in the following,

$$x \equiv \beta' r \qquad \text{and} \qquad x_a \equiv \beta' a \quad . \qquad \text{(D.2.11)}$$

Then (D.2.8) becomes

$$[x^2\partial_x^2 + 3x\partial_x + (1-m^2) + x^2]\,\{x^{-1}\,F_m(x)\} = 2j\,(k/\beta')\,C_{zm}\,x\,J_m(x)$$

or

$$x\,[x^2\partial_x^2 + 3x\partial_x + (1-m^2) + x^2]\,\{x^{-1}\,F_m(x)\} = K_m\,x^2\,J_m(x)\,. \qquad \text{(D.2.12)}$$

Ever eager, Maple expands the left side of (D.2.12),

```
g := fm(x)/x:
L := x*(x^2*diff(g,x,x)+3*x*diff(g,x) + ((1-m^2) + x^2)*g):
     simplify(%): expand(%): collect(%,fm(x));
```

$$(-m^2 + x^2)\,\mathrm{fm}(x) + \left(\frac{\partial^2}{\partial x^2}\mathrm{fm}(x)\right)x^2 + \left(\frac{\partial}{\partial x}\mathrm{fm}(x)\right)x$$

so that (D.2.12) becomes

$$[\,x^2\,\partial_x^2 + x\,\partial_x + (x^2-m^2)]\,F_m(x) = K_m\,x^2\,J_m(x)\,. \qquad \text{(D.2.13)}$$

The left side of (D.2.13) is the normal Bessel operator [Spiegel 24.1] , but the equation is also *driven* by a power times a Bessel function. The solution to the equation is the homogeneous solution of the Bessel equation plus the particular solution which is the response to the driving function on the right hand side.

The homogeneous solution is the usual linear combination of $J_m(x)$ and $Y_m(x)$, but we must reject $Y_m(x)$ since it blows up at x=0 and thereby causes the field E_r to be singular, which it cannot be, smack in the middle of a wire.

The particular solution is not very obvious and required some hunting to find. It is this

$$F_m(x)^{particular} = (1/2)\, K_m\, [\, x\; J_{m+1}(x)\,] \quad . \qquad (D.2.14)$$

as Maple confirms, continuing the above code,

```
fm := (x) -> (1/2)*Km*x*BesselJ(m+1,x);
```

$$fm := x \rightarrow \frac{1}{2} Km\, x\, \mathrm{BesselJ}(m+1, x)$$

```
L: simplify(%);
```

$$x^2\, Km\, \mathrm{BesselJ}(m, x)$$

Therefore, we now have this full solution for $F_m(x)$

$$F_m(x) = F_m(x)^{particular} + F_m(x)^{homogeneous} = (1/2)\, K_m\, [\, x\; J_{m+1}(x)\,] + a_m\, J_m(x)$$

and then from (D.2.10) the full solution for E_r ,

$$E_r(r,m) = a_m\; x^{-1}\, J_m(x) + \frac{K_m}{2}\; J_{m+1}(x) \quad . \qquad (D.2.15)$$

For each value of m, there are two as-yet undetermined constants, a_m and $(K_m/2)$. However, looking at (D.2.15), we see that, since $J_0(x) \approx 1$ for small x, we must have

$$a_0 = 0 \qquad (D.2.16)$$

to keep E_r finite at r = 0. Later we shall obtain expressions for a_m and $(K_m/2)$.

(c) The E_θ Solution

Recall (D.2.6) in slightly altered form,

$$jmE_\theta(r,m) = -\partial_r[rE_r(r,m)] + r\,(jk)E_z(r,m) \,. \qquad \textit{(D.2.6)}$$

We can then insert our known E_z and E_r to get E_θ :

$$E_z(r,m) = C_{zm}\, J_m(x) \qquad \textit{(D.2.4)}$$

$$E_r(r,m) = a_m\; x^{-1}\, J_m(x) + \frac{K_m}{2}\; J_{m+1}(x) \quad . \qquad \textit{(D.2.15)}$$

so (D.2.6) just above becomes the following :

$$jmE_\theta(r,m) = -\partial_r[r\{\, a_m\; x^{-1}\, J_m(x) + \frac{K_m}{2}\; J_{m+1}(x)\}] + r\,(jk)\, C_{zm}\, J_m(x)$$

$$jmE_\theta(r,m) = -\partial_x[x\{ a_m\ x^{-1}\ J_m(x) + \frac{K_m}{2}\ J_{m+1}(x)\}] + \frac{K_m}{2}\ x\ J_m(x) \qquad // K_m \equiv 2j\ (k/\beta')\ C_{zm}$$

$$jmE_\theta(r,m) = -\partial_x[a_m\ J_m(x) + \frac{K_m}{2}\ x\ J_{m+1}(x)] + \frac{K_m}{2}\ x\ J_m(x)$$

$$jmE_\theta(r,m) = -a_m\ J_m'(x) - \frac{K_m}{2}\ J_{m+1}(x) - \frac{K_m}{2}\ x\ J_{m+1}'(x) + \frac{K_m}{2}\ x\ J_m(x)$$

$$jmE_\theta(r,m) = -a_m\ J_m'(x) + \frac{K_m}{2}\ [\ -J_{m+1}(x) - x\ J_{m+1}'(x) + x\ J_m(x)\ ] \quad . \qquad \text{(D.2.17)}$$

At this point we invoke the recurrence relations [NIST 10.6.2], where $\mathscr{C}$ is any Bessel function,

10.6.2

$$\mathscr{C}_\nu'(z) = \mathscr{C}_{\nu-1}(z) - (\nu/z)\,\mathscr{C}_\nu(z),$$
$$\mathscr{C}_\nu'(z) = -\mathscr{C}_{\nu+1}(z) + (\nu/z)\,\mathscr{C}_\nu(z).$$

to write

$$J_{m+1}' = J_m - (m+1)x^{-1}J_{m+1} \qquad \text{first relation with } \nu = m+1$$
$$J_m' = -J_{m+1} + (m/x)J_m \qquad \text{second relation with } \nu = m \quad . \qquad \text{(D.2.18)}$$

Insert these into (D.2.17) to get

$$jmE_\theta(r,m) = -a_m\ J_m' + \frac{K_m}{2}\ [\ -x\ J_{m+1}' - J_{m+1} + xJ_m]$$

$$= -a_m\ \{-J_{m+1} + (m/x)J_m\ \} + \frac{K_m}{2}\ [\ -x\ \{\ J_m - (m+1)x^{-1}J_{m+1}\} - J_{m+1} + xJ_m]$$

$$= a_m\ J_{m+1} - a_m\,(m/x)J_m + \frac{K_m}{2}\ [\ -x\ J_m + (m+1)\ J_{m+1} - J_{m+1} + xJ_m]$$

$$= a_m\ J_{m+1} - a_m\,(m/x)J_m + \frac{K_m}{2}\ [\ m\ J_{m+1}]$$

$$= -a_m\,(m/x)J_m + (\frac{K_m}{2}\ m + a_m)\ J_{m+1} \quad .$$

Dividing by m then gives the final solution,

$$jE_\theta(r,m) = -a_m\ x^{-1}\ J_m(x) + (\frac{K_m}{2} + \frac{a_m}{m})\ J_{m+1}(x) \qquad x = \beta' r \quad . \qquad \text{(D.2.19)}$$

We now gather up the solutions developed above, but first, recall that

$$K_m \equiv 2j\ (k/\beta')\ C_{zm} \qquad \textit{(D.2.5)}$$

which we can solve to get

$$C_{zm} = (1/2j)(\beta'/k)\ K_m\ . \qquad \text{(D.2.20)}$$

Installing this into (D.2.4), our three E field components are then

First summary of the E field solutions (D.2.21)

$E_z(r,m) = -j\,(\beta'/k)\,\frac{K_m}{2}\,J_m(x)$ $\qquad x = \beta' r$ *(D.1.27)*

$E_r(r,m) = a_m\,x^{-1}\,J_m(x) + \frac{K_m}{2}\,J_{m+1}(x)$ $\qquad \beta'^2 = \beta^2 - k^2$ *(D.2.11)*

$jE_\theta(r,m) = -a_m\,x^{-1}\,J_m(x) + \left(\frac{K_m}{2} + \frac{a_m}{m}\right) J_{m+1}(x)$ *(D.2.15)*

These solutions were obtained from the z and r Helmholtz equations and from the div **E** = 0 equation. It is an easy matter to have Maple *verify* that this solution set solves the div **E** equation and *all three* of the Helmholtz equations z, r and θ : [here k is called bd]

```
alias(I=I, j= sqrt(-1), J=BesselJ):
```

Enter the left sides of the four equations in box (D.1.20):

```
e1 := r^2*Diff(Ez,r,r) + r*Diff(Ez,r) -m^2*Ez + r^2*bp^2*Ez;
```

$$e1 := r^2\left(\frac{\partial^2}{\partial r^2} Ez\right) + r\left(\frac{\partial}{\partial r} Ez\right) - m^2\,Ez + r^2\,bp^2\,Ez$$

```
e2 := r^2*Diff(Er,r,r) + r*Diff(Er,r) -(m^2+1)*Er + r^2*bp^2*Er -2*j*m*Ephi;
```

$$e2 := r^2\left(\frac{\partial^2}{\partial r^2} Er\right) + r\left(\frac{\partial}{\partial r} Er\right) - (m^2+1)\,Er + r^2\,bp^2\,Er - 2\,j\,m\,Ephi$$

```
e3 := r^2*Diff(Ephi,r,r) + r*Diff(Ephi,r) -(m^2+1)*Ephi + r^2*bp^2*Ephi +2*j*m*Er;
```

$$e3 := r^2\left(\frac{\partial^2}{\partial r^2} Ephi\right) + r\left(\frac{\partial}{\partial r} Ephi\right) - (m^2+1)\,Ephi + r^2\,bp^2\,Ephi + 2\,j\,m\,Er$$

```
e4 := Diff(r*Er,r) + j*m*Ephi - j*bd*r*Ez;
```

$$e4 := \left(\frac{\partial}{\partial r} r\,Er\right) + j\,m\,Ephi - j\,bd\,r\,Ez$$

Next, enter the claimed E field solutions from box (D.2.21):

```
Ez := -j*(bp/bd)*(Km/2)*J(m,x);
```

$$Ez := -\frac{1}{2}\frac{j\,bp\,Km\,J(m,x)}{bd}$$

```
Er := am*(1/x)*J(m,x) + (Km/2)*J(m+1,x);
```

$$Er := \frac{am\,J(m,x)}{x} + \frac{1}{2}\,Km\,J(m+1,x)$$

```
Ephi := (-j)*(-am*(1/x)*J(m,x) + (Km/2+am/m)*J(m+1,x));
```

$$Ephi := -j\left(-\frac{am\,J(m,x)}{x} + \left(\frac{1}{2}\,Km + \frac{am}{m}\right) J(m+1,x)\right)$$

```
x := bp*r;  set x
```

$$x := bp\,r$$

Show that each left side evaluates to zero as box (D.1.20) requires

```
value(e1): simplify(%);
```

$$0$$

```
value(e2): simplify(%);
```

$$0$$

```
value(e3): simplify(%);
```

$$0$$

```
value(e4): simplify(%);
```

$$0$$

In Maple one must be careful with this kind of verification to make sure Maple has not misunderstood something. For example, perhaps it thinks $\partial_r E_z = 0$ because it thinks E_z is a constant. This is the purpose of using the "inert" Diff operators (versus diff) and then forcing them to evaluate later with the value() operator. One should always view expressions before simplification to make sure things are kosher. For example, changing the colon to semicolon after value(e1) to force display, one gets

```
> value(e1); simplify(%);
```

$$-\frac{1}{2}\frac{j r^2 bp^2 Km\left(-\left(\mathrm{J}(m, bp\,r)-\frac{(m+1)\,\mathrm{J}(m+1, bp\,r)}{bp\,r}\right)bp-\frac{m\,\mathrm{J}(m, bp\,r)}{bp\,r^2}+\frac{m\left(-\mathrm{J}(m+1, bp\,r)+\frac{m\,\mathrm{J}(m, bp\,r)}{bp\,r}\right)}{r}\right)}{bd}$$

$$-\frac{1}{2}\frac{j r\, bp^2 Km\left(-\mathrm{J}(m+1, bp\,r)+\frac{m\,\mathrm{J}(m, bp\,r)}{bp\,r}\right)}{bd}+\frac{1}{2}\frac{j m^2 bp\, Km\,\mathrm{J}(m, bp\,r)}{bd}-\frac{1}{2}\frac{j r^2 bp^3 Km\,\mathrm{J}(m, bp\,r)}{bd}$$

$$0$$

Here Maple has duly computed the Bessel function derivatives in expression e1 but does not yet realize that the expression is 0. This is brought out by the simplify(%) command (simplify that last computed expression) and the output of the simplify command is the 0 on the last line.

(d) The Charge Pumping Boundary Condition

The reason we are interested in the surface charge n(θ) of (D.1.5) is that it acts as a driving source of the radial electric field inside the wire. Recall the equation of continuity (1.1.35) converted to the ω domain

$$\text{div}\,\mathbf{J} = -j\omega\rho \quad \Leftrightarrow \quad -j\omega\left[\int_V \rho\, dV\right] = \int_S \mathbf{J}\bullet d\mathbf{S}\,. \tag{D.2.22}$$

This is meant to be (1.1.25) where **J** is conduction current and ρ is free charge. When applied to a thin box of radial area dS straddling the wire surface,

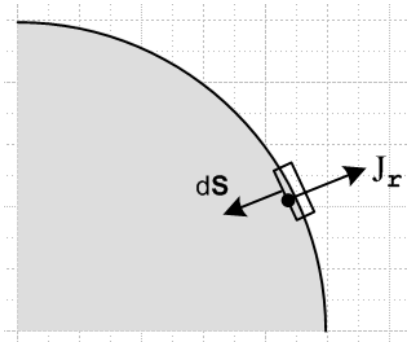

Fig D.2

one finds that $\int_S \mathbf{J} \bullet d\mathbf{S} = -J_r(r=a-\varepsilon,\theta)dS$ and $\int_V \rho\, dV = n(\theta)\, dS$ so that (ε implies just below surface)

$$J_r(r=a-\varepsilon,\theta) = j\omega\, n(\theta) \quad . \tag{D.2.23}$$

We assume that there is no conduction current outside the wire to get this result (non-conducting dielectric). Since $\mathbf{J} = \sigma\mathbf{E}$, this is really a boundary condition on the radial electric field just below the surface,

$$E_r(r=a-\varepsilon,\theta) = (j\omega/\sigma)\, n(\theta) \; . \tag{D.2.24}$$

We convert this to m-space using the conversion rules (D.1.16) to obtain (dropping the ε)

$$E_r(r=a,m) = (j\omega/\sigma)\, N_m \; . \tag{D.2.25}$$

Thus, the interior radial electric field must have a certain value at the r=a boundary in each partial wave, and this value is determined by the moment of the surface charge distribution.

By way of interpretation, the surface charge of a transmission line is "pumped" by the radial current in the wire (in quadrature). This radial current is accompanied by the usual longitudinal current one expects to find inside the conductors of a transmission line.

If the dielectric conducts with some $\sigma_d > 0$ but $\sigma_d << \sigma$, one must make these replacements in (D.2.24) and (D.2.25),

$$n(\theta) \rightarrow (\xi_d/\varepsilon_d)\, n(\theta) \qquad\qquad N_m \rightarrow (\xi_d/\varepsilon_d)\, N_m \; .$$

See (D.9.23) and surrounding discussion. Generally we shall assume $\sigma_d = 0$ in the following work just to avoid having the extra (ξ_d/ε_d) factors floating around.

(e) Application of the Boundary Conditions

Our task here is to derive expressions for the constants a_m and K_m appearing in the above E field component equations.

We have two boundary conditions to impose:

$$E_r(r=a,m) = (j\omega/\sigma)\, N_m \qquad (D.2.26)$$

$$E_\theta(r=a,m) = 0 \qquad (D.2.27)$$

The first is the radial charge pumping condition shown in (D.2.25) above. The second boundary condition is an assumption that requires its own discussion in Section D.8 below. It implies that the cross sectional wire surface is an equipotential surface and that therefore $E_\theta(r=a,\theta) = 0$. This in turn requires that in each partial wave $E_\theta(r,m) = 0$ since

$$E_\theta(r,m) = (1/2\pi) \int_{-\pi}^{\pi} d\theta\, E_\theta(r,\theta)\, e^{-jm\theta} \qquad \textit{(D.1.3b)}$$

$$E_\theta(a,m) = (1/2\pi) \int_{-\pi}^{\pi} d\theta\, E_\theta(a,\theta)\, e^{-jm\theta} = (1/2\pi) \int_{-\pi}^{\pi} d\theta\, 0\, e^{-jm\theta} = 0 \ .$$

These two boundary conditions serve to determine the two constants a_m and K_m, though a bit of algebra is required. The first step is to use the E_r and E_θ expressions shown in summary box (D.2.21) to write out the two boundary conditions as

$$a_m\, x_a^{-1}\, J_m(x_a) + \frac{K_m}{2}\, J_{m+1}(x_a) = (j\omega/\sigma)\, N_m \qquad (1)$$

$$-a_m\, x_a^{-1}\, J_m(x_a) + \left(\frac{K_m}{2} + \frac{a_m}{m}\right) J_{m+1}(x_a) = 0 \ . \qquad (2)$$

Addition and subtraction of these equations gives two new equations,

$$\frac{K_m}{2}\, J_{m+1}(x_a) + \left(\frac{K_m}{2} + \frac{a_m}{m}\right) J_{m+1}(x_a) = (j\omega/\sigma)\, N_m \qquad (3)$$

$$2\, a_m\, x_a^{-1}\, J_m(x_a) - \frac{a_m}{m}\, J_{m+1}(x_a) = (j\omega/\sigma)\, N_m \ . \qquad (4)$$

Using the recursion relation $2m\, x^{-1}\, J_m = [J_{m+1} + J_{m-1}]$, the second may be immediately solved for a_m,

$$\frac{a_m}{m} = (j\omega/2\sigma)\, 2\, N_m \frac{1}{J_{m-1}(x_a)} \ . \qquad (5)$$

Using this same recursion relation and (5) for a_m , equation (2) may be solved to get

$$\left(\frac{K_m}{2} + \frac{a_m}{m}\right) = (j\omega/2\sigma)\, N_m \left[\frac{1}{J_{m+1}(x_a)} + \frac{1}{J_{m-1}(x_a)}\right] \ . \qquad (6)$$

Finally, subtracting (5) from (6) we find

$$\frac{K_m}{2} = (j\omega/2\sigma)\, N_m \left[\frac{1}{J_{m+1}(x_a)} - \frac{1}{J_{m-1}(x_a)}\right] \quad . \qquad (7)$$

Notice the following situations for m = 0,

$$a_0 = 0 \qquad (8) \qquad \text{// from (5)}$$

$$\frac{a_0}{0} = (j\omega/2\sigma)\, 2\, N_0 \frac{1}{J_{-1}(x_a)} = -(j\omega/2\sigma)\, 2\, N_0 \frac{1}{J_1(x_a)} \qquad (9) \qquad \text{// from (5)}$$

$$\frac{K_0}{2} = (j\omega/2\sigma)\, N_0 \left[\frac{1}{J_1(x_a)} - \frac{1}{J_{-1}(x_a)}\right] = (j\omega/\sigma)\, N_0 \frac{1}{J_1(x_a)} \qquad (10) \qquad \text{// from (7)}$$

$$\left(\frac{K_0}{2} + \frac{a_0}{0}\right) = 0 \qquad (11) \qquad \text{// adding (9) and (10)}$$

We summarize the coefficients as follows:

$$a_m = (j\omega/2\sigma)\, 2m\, N_m \frac{1}{J_{m-1}(x_a)} \quad . \qquad a_0 = 0 \qquad (D.2.28)$$

$$\frac{K_m}{2} = (j\omega/2\sigma)\, N_m \left[\frac{1}{J_{m+1}(x_a)} - \frac{1}{J_{m-1}(x_a)}\right] \qquad \frac{K_0}{2} = (j\omega/\sigma)\, N_0 \frac{1}{J_1(x_a)}$$

$$\left(\frac{K_m}{2} + \frac{a_m}{m}\right) = (j\omega/2\sigma)\, N_m \left[\frac{1}{J_{m+1}(x_a)} + \frac{1}{J_{m-1}(x_a)}\right] \qquad \left(\frac{K_0}{2} + \frac{a_0}{0}\right) = 0$$

The third equation is obvious from adding the first two, and Maple verifies that the first two satisfy (1) and (2). At this point it is convenient to introduce the DC resistance per unit length of the wire (C.1.1),

$$R_{dc} = \frac{1}{\sigma\pi a^2} \qquad (D.2.29)$$

along with a new symbol to indicate the *relative* surface charge moment,

$$\eta_m \equiv \frac{N_m}{N_0} \quad . \qquad (D.2.30)$$

The DC moment N_0 can be related to the total current I in the wire as follows:

$$I = \int_0^{2\pi} d\theta \int_0^a r\, dr\, J_z(r,\theta) = \int_0^{2\pi} d\theta \int_0^a r\, dr \left\{ \sigma \sum_{m=-\infty}^{\infty} E_z(r,m)\, e^{jm\theta} \right\} \qquad \text{// (D.1.3a)}$$

$$= \sigma \sum_{m=-\infty}^{\infty} \int_0^a r\, dr\, E_z(r,m) \int_0^{2\pi} d\theta\, e^{jm\theta} = 2\pi\sigma \int_0^a r\, dr\, E_z(r,0)$$

$$= 2\pi\sigma \int_0^a r\, dr \left\{ -j(\beta'/k) \frac{K_0}{2} J_0(x) \right\} \qquad \text{// (D.2.21) for } E_z(r,0)$$

$= -j(\beta'/k)\, 2\pi\sigma \frac{K_0}{2} \int_0^a r\, dr\, J_0(x)$ // $x = \beta' r$ so $xdx = \beta'^2\, rdr$

$= -j(\beta'k)^{-1}\, 2\pi\sigma \frac{K_0}{2} [\int_0^{x_a} dx\, x\, J_0(x)] = -j(\beta'k)^{-1}\, 2\pi\sigma \frac{K_0}{2} [\, x_a\, J_1(x_a)\,]$ // GR7 5.52.1

$= -j(\beta'k)^{-1}\, 2\pi\sigma \{(j\omega/\sigma)\, N_0 / J_1(x_a)\} [\, x_a\, J_1(x_a)\,]$ // (D.2.28) for $\frac{K_0}{2}$

$= (\beta'k)^{-1}\, 2\pi\omega\, N_0\, x_a = (\beta'k)^{-1}\, 2\pi\omega\, N_0\, \beta' a$

$= 2\pi\omega\, (a/k)\, N_0$

so that

$N_0 = (k/2\pi\omega a)\, I$. // I is called i(z=0) in (4.9.2) so I = i(0) (D.2.31)

As a check on this last result, recall from (D.1.8) that $N_0 = (1/2\pi a)\, q(0)$, so (D.2.31) says

$(1/2\pi a)\, q(0) = (k/2\pi\omega a)\, i(0)$

or

$q(0) = (k/\omega)\, i(0)$.

Given $q(z) = q(0)\, e^{-jkz}$ as in (4.3.8), $i(z) = i(0)\, e^{-jkz}$ as in (4.9.2), and $k = \omega/v_d$ as in (2.1.4b) (for a lossless line) we obtain

$q(z) = i(z)/v_d$

which agrees with (4.11.19a) [no d subscripts were used in Chapter 4 for the dielectric.]

It follows from (D.2.31) that the normalization factor appearing in (D.2.28) may be written as

$(j\omega/2\sigma)\, N_m = (j\omega/2\sigma) \frac{N_m}{N_0} N_0 = (j\omega/2\sigma)\, \eta_m\, [(k/2\pi\omega a)\, I\,] = (j/4)\, \eta_m\, (ak/\sigma\pi a^2)\, I$

$= (j/4)\, (ak)\, \eta_m\, I\, R_{dc}$. (D.2.32)

We may now construct the final form for our E field solutions in (D.2.21) using the coefficients in (D.2.28) and the replacement (D.2.32) :

$E_z(r,m) = -j(\beta'/k) \frac{K_m}{2} J_m(x) = -j(\beta'/k)\, (j\omega/2\sigma)\, N_m [\frac{1}{J_{m+1}(x_a)} - \frac{1}{J_{m-1}(x_a)}]\, J_m(x)$

$= -j(\beta'/k)\, [(j/4)\, (ak)\, \eta_m\, I\, R_{dc}]\, [\frac{1}{J_{m+1}(x_a)} - \frac{1}{J_{m-1}(x_a)}]\, J_m(x)$

$= (1/4)\, \eta_m\, I\, R_{dc}\, (a\beta') [\frac{J_m(x)}{J_{m+1}(x_a)} - \frac{J_m(x)}{J_{m-1}(x_a)}]$

$$E_r(r,m) = a_m\, x^{-1}\, J_m(x) + \frac{K_m}{2}\, J_{m+1}(x)$$

$$= [(j\omega/2\sigma)\, N_m]\ \{\ 2m\, \frac{1}{J_{m-1}(x_a)}\, x^{-1}\, J_m(x)\ + [\frac{1}{J_{m+1}(x_a)} - \frac{1}{J_{m-1}(x_a)}]\, J_{m+1}(x)\ \}$$

$$= (j/4)\, (ak)\, \eta_m\, I\, R_{dc}\ \ \{\ \frac{2mx^{-1}J_m(x)}{J_{m-1}(x_a)}\ +\ \frac{J_{m+1}(x)}{J_{m+1}(x_a)}\ -\ \frac{J_{m+1}(x)}{J_{m-1}(x_a)}\ \}$$

$$= (j/4)\, (ak)\, \eta_m\, I\, R_{dc}\ \ \{\ \frac{J_{m+1}(x)}{J_{m+1}(x_a)} + \frac{J_{m-1}(x)}{J_{m-1}(x_a)}\ \}$$

where in the last line we used the NIST (10.6.1) Bessel identity $(2m/x)J_m(x) = J_{m-1}(x) + J_{m+1}(x)$. Next,

$$jE_\theta(r,m) \quad = -\, a_m\, x^{-1}\, J_m(x) + (\frac{K_m}{2}\ + \frac{a_m}{m})\, J_{m+1}(x)$$

$$= [(j\omega/2\sigma)\, N_m]\ \{\ -\, 2m\, x^{-1}\, \frac{1}{J_{m-1}(x_a)}\ + [\ \frac{1}{J_{m+1}(x_a)}\ + \frac{1}{J_{m-1}(x_a)}\ ]\, J_{m+1}(x)$$

$$= (j/4)\, (ak)\, \eta_m\, I\, R_{dc}\ \{\ -\, \frac{2mx^{-1}J_m(x)}{J_{m-1}(x_a)}\ + [\ \frac{J_{m+1}(x)}{J_{m+1}(x_a)}\ +\ \frac{J_{m+1}(x)}{J_{m-1}(x_a)}\ ]\ \}$$

$$= (j/4)\, (ak)\, \eta_m\, I\, R_{dc}\ \{\ \frac{J_{m+1}(x)}{J_{m+1}(x_a)}\ -\ \frac{J_{m-1}(x)}{J_{m-1}(x_a)}\ \}$$

Gathering up one more time:

Second summary of the E field solutions : $\quad R_{dc} = \frac{1}{\sigma\pi a^2} \quad \beta'^2 = \beta^2 - k^2 \quad$ (D.2.33)

$E_z(r,m) = (1/4)\, \eta_m\, I\, R_{dc}\ (a\beta')\, f_m \qquad f_m = [\frac{J_m(x)}{J_{m+1}(x_a)}\ -\ \frac{J_m(x)}{J_{m-1}(x_a)}\ ] \qquad x = \beta' r$

$E_r(r,m) = (j/4)\, \eta_m\, I\, R_{dc}\ (ak)\, g_m \qquad g_m = [\ \frac{J_{m+1}(x)}{J_{m+1}(x_a)} + \frac{J_{m-1}(x)}{J_{m-1}(x_a)}\ ] \qquad x_a = \beta' a$

$E_\theta(r,m) = (1/4)\, \eta_m\, I\, R_{dc}\ (ak)\ h_m \qquad h_m = [\frac{J_{m+1}(x)}{J_{m+1}(x_a)}\ -\ \frac{J_{m-1}(x)}{J_{m-1}(x_a)}\ ]$

Maple verification of these solutions is shown below.

Observations about the solution:

(1) We looked for a traveling wave solution inside a round wire in which phase fronts propagate down the wire (z direction) with angular frequency ω and wavelength λ = 2π/Re(k). We found the solution shown in the above box. This solution satisfies all three components of the vector Helmholtz equation (D.1.2) as well as the div **E** = 0 equation.

(2) For a lossless line one has $\xi \approx \sigma/(j\omega)$ and $\xi_d \approx \varepsilon_d$. These are the complex dielectric "constants". The corresponding wavenumbers are then

$$\beta' \approx \beta = \omega\sqrt{\mu\xi} \approx \omega\sqrt{\mu\,\sigma/(j\omega)} = e^{j3\pi/4}\sqrt{\omega\mu\sigma} = e^{j3\pi/4}(\sqrt{2}/\delta) \qquad \textit{(1.5.1) ,(2.2.19), (2.2.21)}$$

$$k = \beta_d = \omega\sqrt{\mu_d\xi_d} \approx \omega\sqrt{\mu_d\varepsilon_d} = \omega / v_d \qquad v_d = \text{speed of light in the dielectric} \qquad \text{(D.2.34)}$$

Thus, in our wave solution (D.1.1), the phase fronts propagate down the *inside* of the wire at v_d, the speed of light in the dielectric *outside* the wire. Although we have been quiet about the fields outside the wire, it seems reasonable to presume there is a wave outside also moving down the wire at v_d . See Section D.7.

(3) For r near a, where most of the action occurs due do the skin effect, the Bessel function ratios appearing in (D.2.33) are on the general order of unity so we expect the three brackets [...] to be of the same general size. It then follows that the E_r and E_θ fields are smaller than E_z by the ratio |k/β'| which we have shown in the discussion below (D.2.2) is very small at frequencies below 100 GHz (lossless). Since E_z is an electric field inside copper, it is already itself quite small, so the E_r and E_θ fields are extremely small. This then justifies their omission from the development of Chapter 2.

(4) If there exist moments N_m of the surface charge distribution on the wire with m > 1, then the corresponding $\eta_m \neq 0$ and it is clear that $E_z(r,\theta)$ and hence $J_z(r,\theta)$ are non-uniform inside the wire. That is, these fields vary with θ as cos(mθ) as well as with r. The non-uniformity is not "small" but has the full strength of η_m. Of course we only expect to get significant moments of charge density n(θ) when conductors are "fat and close". See (6.5.4) for the special case of both conductors being round wires, and then Section 6 (b) for more on this "proximity effect".

(5) The surface impedance from (C.2.1) is just $Z_s(\theta) = E_z(r=a,\theta)/I$. Thus, from (D.1.3a),

$$Z_s(\theta) = (1/I)\sum_{m=-\infty}^{\infty} E_z(a,m)\, e^{jm\theta} \qquad \textit{// (D.1.3a)}$$

$$= (1/4)\, R_{dc} \sum_{m=-\infty}^{\infty} \eta_m \left[\frac{x_a J_m(x_a)}{J_{m+1}(x_a)} - \frac{x_a J_m(x_a)}{J_{m-1}(x_a)}\right] e^{jm\theta} \qquad \textit{// (D.2.33)}$$

where, (D.2.35)

$$\eta_m = N_m/N_0 = \frac{\omega a}{kI}\int_{-\pi}^{\pi} d\theta\, n(\theta)\, e^{-jm\theta} \qquad \textit{// (D.1.5b) and (D.2.31)}$$

Thus we see the expected non-uniformity of $Z_z(\theta)$ around the perimeter of the wire cross section due to the $m \neq 0$ surface charge components.

Maple verification of box (D.2.33)

We use the same method illustrated below box (D.2.21). The same expressions e1,e2,e3,e4 are entered as the left sides of the four equations whose right sides we expect to be 0. Then: [needs repair]

Enter the claimed E field solutions from box (D.2.33)

```
Ez := k*(xa*J(m,x)/J(m+1,xa) -  xa*J(m,x)/J(m-1,xa));
```

$$Ez := k\left(\frac{xa\,J(m,x)}{J(m+1,xa)} - \frac{xa\,J(m,x)}{J(m-1,xa)}\right)$$

```
Er := k*j*(a*bd)*(J(m+1,x)/J(m+1,xa) + J(m-1,x)/J(m-1,xa));
```

$$Er := j\,k\,a\,bd\left(\frac{J(m+1,x)}{J(m+1,xa)} + \frac{J(m-1,x)}{J(m-1,xa)}\right)$$

```
Ephi := k*(a*bd)*(J(m+1,x)/J(m+1,xa) - J(m-1,x)/J(m-1,xa));
```

$$Ephi := k\,a\,bd\left(\frac{J(m+1,x)}{J(m+1,xa)} - \frac{J(m-1,x)}{J(m-1,xa)}\right)$$

```
x := bp*r: xa := bp*a:
```
set x and xa

```
k := (1/4)*(Nm/N0)*I*Rdc;
```

$$k := \frac{1}{4}\frac{Nm\,I\,Rdc}{N0}$$

Show that each left side evaluates to zero as box (D.1.20) requires

```
value(e1): simplify(%);
```

$$0$$

```
value(e2): simplify(%);
```

$$0$$

```
value(e3): simplify(%);
```

$$0$$

```
value(e4): simplify(%);
```

$$0$$

Now check the boundary conditions

```
I := (2*Pi*omega*a/bd)*N0:      # (D.2.31)
Rdc := 1/(sigma*Pi*a^2):
r := a:
Er: simplify(%);     # compare (D.2.26)
```

$$\frac{j\,\omega\,Nm}{\sigma}$$

```
Ephi: simplify(%);  # compare (D.2.27)
```

$$0$$

D.3 What about the E_θ Helmholtz Equation ?

A review of the above derivation of the three fields E_z, E_r and E_θ shows that the E_θ Helmholtz equation has been completely ignored. The E_θ expression was obtained from the div **E** = 0 equation after the E_z and E_r fields were computed.

It is reasonable to wonder whether the solution fields we have found above in fact solve this θ Helmholtz equation which mixes the E_r and E_θ fields together in a manner similar to the r Helmholtz equation.

A related question is whether the three Helmholtz equations and div **E** = 0 are four independent equations, or is one of the three Helmholtz equations dependent? In Cartesian coordinates suppose we know that (implied sums on repeated indices)

$$(\partial_j\partial_j + \beta^2)\, E_1 = 0$$
$$(\partial_j\partial_j + \beta^2)\, E_2 = 0$$
$$\partial_i E_i = 0 \ . \qquad \text{// div } \mathbf{E} = 0 \tag{D.3.1}$$

Can we show that $(\partial_j\partial_j + \beta^2)\, E_3 = 0$ so this third Helmholtz equation is dependent? If we apply the operator $(\partial_j\partial_j + \beta^2)$ to the last equation above we get

$$(\partial_j\partial_j + \beta^2)\, \partial_i E_i = 0$$

or

$$\partial_i\, (\partial_j\partial_j + \beta^2)\, E_i = 0$$

or

$$\partial_1\, (\partial_j\partial_j + \beta^2)\, E_1 + \partial_2\, (\partial_j\partial_j + \beta^2)\, E_2 + \partial_3\, (\partial_j\partial_j + \beta^2)\, E_3 = 0$$

or

$$\partial_3\, [(\partial_j\partial_j + \beta^2)\, E_3] = 0 \tag{D.3.2}$$

This does not prove that $(\partial_j\partial_j + \beta^2)\, E_3 = 0$ since $(\partial_j\partial_j + \beta^2)E_3 = f(x_1,x_2) \neq 0$ also satisfies (D.3.2).

Rather than pursue this question further, we simply note that the Maple code below box (D.2.21) verifies that the E field solutions given in that box do indeed satisfy the θ Helmholtz equation (as well as the other two Helmholtz equations and the div **E** = 0 equation).

Reader Exercise: Come up with some reason that this had to be the case.

D.4 Computation of the B fields in the round wire

The **B** field components may be computed from the Maxwell curl **E** equation (1.1.2)

$$-\partial_t \mathbf{B} = \text{curl } \mathbf{E} \ . \qquad \text{Maxwell curl E equation} \qquad \textit{(1.1.2)} \tag{D.4.1}$$

In cylindrical coordinates one has from (D.1.14),

$$\text{curl } \mathbf{E} = \hat{\mathbf{r}}\, [\, r^{-1}\partial_\theta E_z - \partial_z E_\theta] + \hat{\boldsymbol{\theta}}\, [\partial_z E_r - \partial_r E_z] + \hat{\mathbf{z}}\, [\, r^{-1}\partial_r(rE_\theta) - r^{-1}\partial_\theta E_r\,] \tag{D.4.2}$$

where the fields are of the traveling wave form shown in (D.1.1) which we assume also for the **B** field. Thus, combining (D.1.1) with (D.1.3a), one has

$$\mathbf{E}(r,\theta,z,t) = e^{j(\omega t - kz)}\,\mathbf{E}(r,\theta) \;=\; e^{j(\omega t - kz)} \sum_{m=-\infty}^{\infty} \mathbf{E}(r,m)\, e^{jm\theta} \qquad \text{(D.4.3)}$$

$$\mathbf{B}(r,\theta,z,t) = e^{j(\omega t - kz)}\,\mathbf{B}(r,\theta) \;=\; e^{j(\omega t - kz)} \sum_{m=-\infty}^{\infty} \mathbf{B}(r,m)\, e^{jm\theta}\,. \qquad \text{(D.4.4)}$$

Inserting the three cylindrical components of the **E** expansion (D.4.3) into (D.4.2), one finds that these replacements may be made,

$$\partial_t \rightarrow +j\omega \qquad \partial_z \rightarrow -jk \qquad \partial_\theta \rightarrow +jm\,. \qquad \text{(D.4.5)}$$

Similarly, inserting the **B** expansion (D.4.4) into $-\partial_t\mathbf{B}$ one may replace $\partial_t \rightarrow +j\omega$. After doing this, both sides of (D.4.1) are expansions having the general form of (D.4.3) and one may then equate terms in the m sum [completeness of the $e^{jm\theta}$ on $(-\pi.\pi)$] to find that

$$-j\omega\mathbf{B}(r,m) \;=\; \hat{\mathbf{r}}\,[\,r^{-1}jmE_z + jkE_\theta] + \hat{\boldsymbol{\theta}}\,[-jkE_r - \partial_r E_z] + \hat{\mathbf{z}}\,[\,r^{-1}\partial_r(rE_\theta) - r^{-1}jmE_r\,] \qquad \text{(D.4.6)}$$

and this then gives the three components of the **B** field

$$B_r(r,m) = (j/\omega)\,[\text{curl } E]_r = (j/\omega)\,[r^{-1}jmE_z + jkE_\theta]$$

$$B_\theta(r,m) = (j/\omega)\,[\text{curl } E]_\theta = (j/\omega)[-jkE_r - \partial_r E_z]$$

$$B_z(r,m) = (j/\omega)\,[\text{curl } E] = (j/\omega)\,[r^{-1}\partial_r(rE_\theta) - r^{-1}jmE_r]\,. \qquad \text{(D.4.7)}$$

It is now a mechanical task to insert our E field components, and such tasks are grist for Maple's mill. We use the E component forms summary box (D.2.21) which have the a_m and K_m constants not yet specified.

```
restart;
alias(I=I,j=sqrt(-1),J=BesselJ);
```
Enter the three cyl coords curlE expressions from (D.4.6)
```
curlE_r := (1/r)*j*m*Ez + j*bd*Ephi;
curlE_phi := -j*bd*Er - Diff(Ez,r);
curlE_z := (1/r)*Diff(r*Ephi,r) - (1/r)*j*m*Er;
```
Enter the E fields from (D.2.21)
```
Ez := -j*(bp/bd)*(Km/2)*J(m,x);
Er := am*(1/x)*J(m,x) + (Km/2)*J(m+1,x);
Ephi := (-j)*(-am*(1/x)*J(m,x) + (Km/2+am/m)*J(m+1,x));
x := bp*r; set x
```
Compute the three B field components from the Maxwell curl E equation
```
Br:=(j/w)*simplify(curlE_r);
Bphi := (j/w)*simplify(value(curlE_phi));
Bz := (j/w)*simplify(value(curlE_z));
```

The alias line "unaliases" I, sets $j = \sqrt{-1}$ in place of the default I, and allows simple reference to the Bessel functions of interest. Diff(Ez,r) represents $\partial_r E_z$, but in an "inert" form which is not executed until later after E_z has been specified. The resulting B field expressions are somewhat ugly but can be cleaned up using a few more Maple manipulations. Having seen the results, we extract certain factors as shown in the following commands,

```
collect(expand((w/bp)*Bz),J);
```
$$\left(\frac{1}{2}Km+\frac{am}{m}\right)\mathrm{J}(m,\,bp\,r)$$
```
collect(expand((w/(j*bp))*Br),J);
```
$$\left(\frac{1}{2}\frac{m\,Km}{r\,bd}-\frac{bd\,am}{bp^2\,r}\right)\mathrm{J}(m,\,bp\,r)+\left(\frac{1}{2}\frac{bd\,Km}{bp}+\frac{bd\,am}{bp\,m}\right)\mathrm{J}(m+1,\,bp\,r)$$
```
collect(expand((w/bp)*Bphi),J);
```
$$\left(\frac{bd\,am}{bp^2\,r}-\frac{1}{2}\frac{m\,Km}{r\,bd}\right)\mathrm{J}(m,\,bp\,r)+\left(\frac{1}{2}\frac{bd\,Km}{bp}+\frac{1}{2}\frac{bp\,Km}{bd}\right)\mathrm{J}(m+1,\,bp\,r)$$

which we then translate back into our normal notation,

$$(\omega/\beta')B_z(r,m) = \left(\frac{K_m}{2}+\frac{a_m}{m}\right)J_m(x)$$

$$(\omega/j\beta')B_r(r,m) = +\left(m\frac{K_m}{2}\frac{1}{rk}-\frac{k}{r\beta'^2}a_m\right)J_m(x)+\frac{k}{\beta'}\left(\frac{K_m}{2}+\frac{a_m}{m}\right)J_{m+1}(x)$$

$$(\omega/\beta')B_\theta(r,m) = -\left(m\frac{K_m}{2}\frac{1}{rk}-\frac{k}{r\beta'^2}a_m\right)J_m(x)+\frac{K_m}{2}\left(\frac{k}{\beta'}+\frac{\beta'}{k}\right)J_{m+1}(x)\,. \qquad \text{(D.4.8)}$$

The last two equations contain the same term which can be written as (recall $x = r\beta'$)

$$\left(m\frac{K_m}{2}\frac{1}{rk}-\frac{k}{r\beta'^2}a_m\right)=\left(m\frac{K_m}{2}\frac{\beta'}{r\beta' k}-\frac{k}{r\beta'^2}a_m\right)=\left(m\frac{K_m}{2}\frac{\beta'}{k}-\frac{k}{\beta'}a_m\right)(1/x)$$

The three equations for the exact **B** field components in the round wire are then shown in the summary box below which includes the earlier **E** field results as well:

Summary of E and B fields inside a round wire (D.4.9)

$$E_z(r,m) = -\,j\,(\beta'/k)\,\frac{K_m}{2}\,J_m(x) \qquad x = \beta' r \qquad \beta'^2 = \beta^2 - k^2$$

$$E_r(r,m) = a_m\,x^{-1}\,J_m(x) + \frac{K_m}{2}\,J_{m+1}(x)\ .$$

$$jE_\theta(r,m) = -\,a_m\,x^{-1}\,J_m(x) + \left(\frac{K_m}{2} + \frac{a_m}{m}\right) J_{m+1}(x) \qquad \textit{(D.2.21)}$$

$$B_z(r,m) = (\beta'/\omega)\left(\frac{K_m}{2} + \frac{a_m}{m}\right)J_m(x)$$

$$B_r(r,m) = j(\beta'/\omega)\left\{ + \left(m\frac{K_m}{2}\frac{\beta'}{k} - \frac{k}{\beta'}a_m\right) x^{-1}J_m(x) + \frac{k}{\beta'}\left(\frac{K_m}{2} + \frac{a_m}{m}\right) J_{m+1}(x) \right\}$$

$$B_\theta(r,m) = (\beta'/\omega)\left\{ - \left(m\frac{K_m}{2}\frac{\beta'}{k} - \frac{k}{\beta'}a_m\right) x^{-1}J_m(x) + \frac{K_m}{2}\left(\frac{k}{\beta'} + \frac{\beta'}{k}\right) J_{m+1}(x) \right\} \quad , \qquad \textit{(D.4.8)}$$

where the constants are given in (D.2.28), which we rewrite using (D.2.32),

$$a_m = (j/4)\,(ak)\,\eta_m\,I\,R_{dc} \;*\; 2m\,\frac{1}{J_{m-1}(x_a)}$$

$$\frac{K_m}{2} = (j/4)\,(ak)\,\eta_m\,I\,R_{dc} \;*\; \left[\frac{1}{J_{m+1}(x_a)} - \frac{1}{J_{m-1}(x_a)}\right]$$

$$\left(\frac{K_m}{2} + \frac{a_m}{m}\right) = (j/4)\,(ak)\,\eta_m\,I\,R_{dc} \;*\; \left[\frac{1}{J_{m+1}(x_a)} + \frac{1}{J_{m-1}(x_a)}\right]\ .$$

The three constant quantities at the end of the above summary box are roughly the same size in terms of scale. Using this fact, and the fact that for a low loss line $|\beta'| >> k = \beta_d$ (so $\beta = \sqrt{\beta'^2 + k^2} \approx \beta'$) we can simplify (D.4.9) to read,

$$B_z(r,m) = (\beta/\omega)\left(\frac{K_m}{2} + \frac{a_m}{m}\right)J_m(x) \qquad \beta' \approx \beta, \quad x = \beta r$$

$$B_r(r,m) = j(\beta/\omega)\left\{ + \left(m\frac{K_m}{2}\frac{\beta}{k}\right) x^{-1}J_m(x) \right\} \qquad // \; m \neq 0$$

$$B_\theta(r,m) = (\beta/\omega)\left\{ - \left(m\frac{K_m}{2}\frac{\beta}{k}\right) x^{-1}J_m(x) + \frac{K_m}{2}\left(\frac{\beta}{k}\right) J_{m+1}(x) \right\}\ . \qquad \text{(D.4.10)}$$

The last line of (D.4.10) can be further simplified,

$$B_\theta(r,m) = (\beta/\omega)\{ - (m\frac{K_m}{2}\frac{\beta}{k}) x^{-1}J_m(x) + \frac{K_m}{2}(\frac{\beta}{k}) J_{m+1}(x) \}$$

$$= (\beta/\omega)\frac{K_m}{2}\frac{\beta}{k}\frac{1}{2}\{ - 2mx^{-1}J_m(x) + 2J_{m+1}(x) \}$$

$$= (\beta/\omega)\frac{K_m}{2}\frac{\beta}{k}\frac{1}{2}\{ - J_{m+1}(x) - J_{m-1}(x) + 2J_{m+1}(x) \} \quad // \text{ Spiegel 24.17 identity}$$

$$= (\beta/\omega)\frac{K_m}{2}\frac{\beta}{k}\frac{1}{2}\{ J_{m+1}(x) - J_{m-1}(x) \} \ . \quad (D.4.11)$$

Therefore, in the limit $|\beta'| >> k = \beta_d$ equations (D.4.10) become

$$B_z(r,m) = (\beta/\omega)(\frac{K_m}{2} + \frac{a_m}{m})J_m(x) \quad \beta' \approx \beta$$

$$B_r(r,m) = j(\beta/\omega)\frac{\beta}{\beta_d}\{ m\frac{K_m}{2} x^{-1}J_m(x) \} \quad // \ m \neq 0$$

$$B_\theta(r,m) = (\beta/\omega)\frac{\beta}{\beta_d}\frac{K_m}{2}\frac{1}{2}[J_{m+1}(x) - J_{m-1}(x)] \ . \quad (D.4.12)$$

For m>0, $|B_r|$ and $|B_\theta|$ are larger than $|B_z|$ by the large factor $|\beta/\beta_d|$.
For m = 0, $\beta_r \approx 0$ so $|\beta_\theta| >> |B_z|$. It is this large B_θ field which appears in Chapter 2 as B_θ.

D.5 Verification that the E and B fields satisfy the Maxwell equations

The Maple program discussed above goes on to verify that the exact **E** and **B** fields obtained above for the round wire in fact satisfy Maxwell's equations. Since the **B** equations were obtained from the curl **E** Maxwell equation, this one is not verified. The other three Maxwell equations are projected into their partial wave versions analogous to (D.4.6) above :

$$\text{div } \mathbf{B}(r,m) = r^{-1}\partial_r(rB_r) + r^{-1}\partial_\theta B_\theta + \partial_z B_z$$
$$= r^{-1}\partial_r(rB_r) + r^{-1}jmB_\theta - jk\,B_z \quad (D.5.1)$$

$$\text{div } \mathbf{E}(r,m) = r^{-1}\partial_r(rE_r) + r^{-1}\partial_\theta E_\theta + \partial_z E_z$$
$$= r^{-1}\partial_r(rE_r) + r^{-1}jmE_\theta - jkE_z \quad (D.5.2)$$

$$\text{curl } \mathbf{B}(r,m) = \hat{\mathbf{r}}[r^{-1}\partial_\theta B_z - \partial_z B_\theta] + \hat{\boldsymbol{\theta}}[\partial_z B_r - \partial_r B_z] + \hat{\mathbf{z}}[r^{-1}\partial_r(rB_\theta) - r^{-1}\partial_\theta B_r]$$
$$= \hat{\mathbf{r}}[r^{-1}jmB_z + jkB_\theta] + \hat{\boldsymbol{\theta}}[-jkB_r - \partial_r B_z] + \hat{\mathbf{z}}[r^{-1}\partial_r(rB_\theta) - r^{-1}jmB_r] \ . \quad (D.5.3)$$

Inside the round wire we expect to find

$$\text{div } \mathbf{B} = 0$$
$$\text{div } \mathbf{E} = 0 \quad // \text{ no free charge}$$
$$\text{curl } \mathbf{B} = \mu\,\mathbf{J} + \mu\, j\omega\varepsilon\mathbf{E} = \mu(\sigma + j\omega\varepsilon)\,\mathbf{E} = \mu(j\omega)(\varepsilon - j\sigma/\omega)\,\mathbf{E} = j\omega\,\mu\xi\,\mathbf{E}$$
$$= j\,(\beta^2/\omega)\,\mathbf{E} \ . \quad // \text{ see (1.5.1)}$$

Thus, for the divergence equations we just compute the divergence as shown and see if it comes out zero, while for the curl **B** equation we verify that

$$\text{curl } \mathbf{B} - j(\beta^2/\omega)\,\mathbf{E} = 0 \qquad \text{(D.5.4)}$$

for each component. The fact (D.2.2) that $\beta'^2 = \beta^2 - k^2$ is also used.

Here then is the Maple code which does the verification of the three Maxwell equations:

```
Show that div B  = 0 using (D.5.1)
divB := (1/r)*diff(r*Br,r)+(1/r)*j*m*Bphi-j*bd*Bz;
simplify(%);
Show that div E  = 0 using (D.5.2)
divE := (1/r)*diff(r*Er,r)+(1/r)*j*m*Ephi-j*bd*Ez;
simplify(%);
Compute components of curl B using (D.5.3)
curlB_r := (1/r)*j*m*Bz + j*bd*Bphi;
curlB_phi := -j*bd*Br - value(diff(Bz,r));
curlB_z := value((1/r)*diff(r*Bphi,r)) - (1/r)*j*m*Br;
b := sqrt(bp^2+bd^2);   set in beta here called b
One component at a time, show that the curl B Maxwell equation (D.5.4) is satsified
tz := curlB_z - (j/w)*b^2*Ez;
simplify(%);
tr := curlB_r - (j/w)*b^2*Er; simplify(%);
simplify(%);
tphi := curlB_phi - (j/w)*b^2*Ephi; simplify(%);
simplify(%);
```

In Maple % refers to the last quantity computed. Prior to each simplify(%) statement we find a huge mess for the expression at hand, but simplify then shows it is really zero. As an example, here is the execution of the verification that $[\text{curl } \mathbf{B}]_z - j(\beta^2/\omega)\,E_z = 0$:

```
> tz := curlB_z - (j/w)*b^2*Ez;
```

$$tz := \frac{1}{2}\left(2\,bd^2\,am\left(-\mathrm{J}(m+1,bp\,r)+\frac{m\,\mathrm{J}(m,bp\,r)}{bp\,r}\right)bp+bd^2\left(\mathrm{J}(m,bp\,r)-\frac{(m+1)\,\mathrm{J}(m+1,bp\,r)}{bp\,r}\right)bp^2\,Km\,r\right.$$
$$+bd^2\,\mathrm{J}(m+1,bp\,r)\,Km\,bp+bp^4\,Km\left(\mathrm{J}(m,bp\,r)-\frac{(m+1)\,\mathrm{J}(m+1,bp\,r)}{bp\,r}\right)r+bp^3\,Km\,\mathrm{J}(m+1,bp\,r)$$
$$\left.-bp^3\,Km\,m\left(-\mathrm{J}(m+1,bp\,r)+\frac{m\,\mathrm{J}(m,bp\,r)}{bp\,r}\right)\right)/(r\,w\,bd\,bp)+\frac{1}{2}($$
$$m^2\,bp^2\,Km\,\mathrm{J}(m,bp\,r)-2\,bd^2\,am\,\mathrm{J}(m,bp\,r)\,m+bd^2\,\mathrm{J}(m+1,bp\,r)\,bp\,r\,Km\,m+2\,bd^2\,\mathrm{J}(m+1,bp\,r)\,bp\,r\,am)$$
$$/(r^2\,w\,bd\,bp)-\frac{1}{2}\frac{(bp^2+bd^2)\,bp\,Km\,\mathrm{J}(m,bp\,r)}{w\,bd}$$

```
> simplify(%);
```

$$0$$

No approximations were made in the E fields, the B fields, or in these Maxwell verifications.

D.6 The exact E and B fields for the m=0 partial wave

The m=0 partial wave is all there is for an axially symmetric problem like that considered in Chapter 2, where the round wire is imagined in isolation, but is operationally the central conductor of a coaxial cable with a very distant return cylinder (outer shield). Here is the reduction of box (D.4.9) for m = 0, making use of the m=0 coefficients noted in box (D.2.28), namely,

$$m = 0 \qquad a_0 = 0 \qquad \left(\frac{K_0}{2} + \frac{a_0}{0}\right) = 0 \qquad \frac{K_0}{2} = (j\omega/\sigma)\, N_0 \frac{1}{J_1(x_a)}$$

Summary of E and B fields inside a round wire (m = 0 only) (D.6.1)

$$E_z(r,0) = -j\,(\beta'/k)\frac{K_0}{2} J_0(x) \qquad \text{// large} \qquad x = \beta' r \qquad \beta'^2 = \beta^2 - k^2$$

$$E_r(r,0) = \frac{K_0}{2} J_1(x)\ . \qquad \text{// small} \qquad \frac{K_0}{2} = (j/2)\,(ak)\, I\, R_{dc}\, \frac{1}{J_1(x_a)}$$

$$jE_\theta(r,0) = 0 \qquad R_{dc} = \frac{1}{\sigma\pi a^2}$$

$$B_z(r,0) = 0$$

$$B_r(r,0) = 0$$

$$B_\theta(r,0) = (\beta'/\omega)\left(\frac{k}{\beta'} + \frac{\beta'}{k}\right)\frac{K_0}{2} J_1(x) \text{// large} \qquad \sim \beta'\,(\beta'/k)$$

No approximations have been made in these results, but a very good approximation for a low loss line is that $|\beta| >> k = \beta_d$ which means $\beta' \approx \beta$, as discussed below equation (D.2.2). With this approximation, we have commented in the above box on the size of the various field components. The dominant components are

$$E_z(r,0) = -j\,(\beta/k)\frac{K_0}{2} J_0(x) = -j\,(\beta/k)\,(j/2)\,(ak)\, I\, R_{dc}\, \frac{J_0(x)}{J_1(x_a)}$$

$$= (1/2)\,\beta\, a\, I\, R_{dc}\, \frac{J_0(x)}{J_1(x_a)} = (\omega/\beta)\,(1/2)\,(a\beta^2/\omega)\, I\, R_{dc}\, \frac{J_0(x)}{J_1(x_a)}$$

$$B_\theta(r,0) = (\beta/\omega)\left(\frac{\beta}{k}\right)(j/2)\,(ak)\, I\, R_{dc}\, \frac{J_1(x)}{J_1(x_a)}$$

$$= (j/2)\,(a\beta^2/\omega)\, I\, R_{dc}\, \frac{J_1(x)}{J_1(x_a)}\ .$$

As shown in (2.2.3) we can write $\beta^2/\omega \approx -j\mu\sigma$ so that

$$(1/2)\,(a\beta^2/\omega)\,I\,R_{dc} = (1/2)\,a\,(-j\mu\sigma)\,I\,\frac{1}{\sigma\pi a^2} = -j\,\frac{\mu I}{2\pi a}$$

and then the dominant components above become

$$E_z(r,0) = (\omega/\beta)\,[-j\,\frac{\mu I}{2\pi a}]\,\frac{J_0(x)}{J_1(x_a)} = -j\,(\omega/\beta)\,\frac{\mu I}{2\pi a}\,\frac{J_0(x)}{J_1(x_a)}$$

$$B_\theta(r,0) = j\,[-j\frac{\mu I}{2\pi a}]\,\frac{J_1(x)}{J_1(x_a)} = \frac{\mu I}{2\pi a}\,\frac{J_1(x)}{J_1(x_a)}\,. \qquad \text{(D.6.2)}$$

These results are in agreement with E(r) and B(r) shown in summary box (2.2.30) from the Chapter 2 calculation where we assumed $\mathbf{E} = E(r)\,\hat{\mathbf{z}}$ and $\mathbf{B} = B(r)\,\hat{\boldsymbol{\theta}}$

D.7 What about the E fields *outside* the round wire?

The Helmholtz equation (D.1.2) outside the wire contains β_d instead of β. If we assume a lossless wave, then $k = \beta_d$ as well in (D.1.1). This means that

$$\beta'^2 = \beta_d^2 - \beta_d^2 = 0\,.$$

We can then translate box (D.1.20) by replacing $\beta^2 - k^2 \rightarrow 0$ and $\beta^2 \rightarrow k^2 = \beta_d^2$ to get the following "exterior" versions: (Note that $\nabla^2 = \nabla^2_{2D} + \partial_z^2$)

$[\nabla^2\mathbf{E}]_z + k^2 E_z = 0$: // $[\nabla^2_{2D}\mathbf{E}]_z = 0$

$[r^2\partial_r^2 + r\,\partial_r - m^2]\,E_z(r,m) = 0$ *(D.1.15)*$_{ext}$

$[\nabla^2\mathbf{E}]_r + k^2 E_r = 0$: // $[\nabla^2_{2D}\mathbf{E}]_r = 0$

$[r^2\partial_r^2 + r\partial_r - (m^2+1)]\,E_r(r,m) - 2jm\,E_\theta(r,m) = 0$ *(D.1.17)*$_{ext}$

$[\nabla^2\mathbf{E}]_\theta + k^2 E_\theta = 0$: // $[\nabla^2_{2D}\mathbf{E}]_\theta = 0$

$[r^2\partial_r^2 + r\partial_r - (m^2+1)]\,E_\theta(r,m) + 2jmE_r(r,m) = 0$ *(D.1.18)*$_{ext}$

div $\mathbf{E} = 0$:

$\partial_r\,[r\,E_r(r,m)] + jmE_\theta(r,m) - j\,k\,r\,E_z(r,m) = 0$ *(D.1.19)*$_{ext}$

The differential operators appearing in the above equations are no longer Bessel-style operators, they are Euler-style operators. Euler ODEs have the general form $[\,r^2\partial_r^2 + a\,r\,\partial_r + b]\,f(r) = 0$, and the solutions have this form (from p 45 of Polyanin's excellent ODE compendium, or just use Maple),

118. $x^2y''_{xx} + axy'_x + by = 0$.

The Euler equation.

Solution:

$$y = \begin{cases} |x|^{\frac{1-a}{2}}\left(C_1|x|^{\mu} + C_2|x|^{-\mu}\right) & \text{if } (1-a)^2 > 4b, \\ |x|^{\frac{1-a}{2}}\left(C_1 + C_2\ln|x|\right) & \text{if } (1-a)^2 = 4b, \\ |x|^{\frac{1-a}{2}}\left[C_1\sin(\mu\ln|x|) + C_2\cos(\mu\ln|x|)\right] & \text{if } (1-a)^2 < 4b, \end{cases}$$

where $\mu = \frac{1}{2}|(1-a)^2 - 4b|^{1/2}$.

For $E_z(r,m)$ the equation *(D.1.15)*$_{ext}$ shown just above is in fact an Euler equation which has a = 1 and $b = -m^2$ so $\mu = m$ and the solution forms are these ($r \geq a$ outside the wire),

$$\begin{aligned} &E_z(r,m) = A_m r^m + B_m r^{-m} && m > 0 \\ &E_z(r,0) = C_z \ln(r) + D_z && m = 0 \quad . \end{aligned} \qquad \text{(D.7.1)}$$

Since z is a Cartesian coordinate, $[\nabla^2_{2D}\mathbf{E}]_z = 0$ is the same as $\nabla^2_{2D}E_z = 0$ which is just the 2D Laplace equation. When this equation is solved in polar coordinates (r,θ), one finds $E_z = E_z(r,m)\, e^{jm\theta}$ and the expressions shown above are the standard atomic forms for the radial function. See for example Stakgold Vol II p 92 (6.7) and following discussion.

We can mimic our interior solution method presented in Section D.2 above, using the div **E** = 0 equation to eliminate E_θ, and eventually end up with expressions for the three field components outside the wire. For m > 1 the general form for the exterior solution is found to be,

$$\begin{aligned} &E_z(r,m) = A_m\ r^m + B_m\ r^{-m} \\ &E_r(r,m) = -(jk/2)\frac{1}{m\text{-}1}\ B_m\, r^{1-m} - 2j\,k\,\frac{1}{m^2\text{-}1}\,A_m\, r^{1+m} + C_m\, r^{m-1} + D_m\ r^{-m-1} \\ &jE_\theta(r,m) = (jk/2)\frac{1}{m\text{-}1}\ B_m\ r^{1-m} + j\,k\,\frac{m^2+2m+3}{m(m^2\text{-}1)}\,A_m\ r^{1+m} - C_m\ r^{m-1} + D_m\ r^{-m-1} \end{aligned} \qquad \text{(D.7.2)}$$

where there are now four constants A_m, B_m, C_m and D_m to be determined in each partial wave. One could match the three E-field boundary conditions at r = a as per (1.1.50) (subscript d means dielectric)

$$\begin{aligned} &E_z(a,m) = E_{zd}(a,m) \\ &\xi\, E_r(a,m) = \xi_d\, E_{rd}(a,m) \\ &jE_\theta(a,m) = jE_{\theta d}(a,m) \end{aligned} \qquad \text{(D.7.3)}$$

using the interior solutions shown in (D.2.33) where $E_\theta(a,m) = 0$. This gives 3 conditions on the 4 unknown constants so these boundary conditions can be met.

The *problem* with this exterior solution method is that more information is needed to solve the problem. The "Smythian Form" solution (D.7.2) is fine, but it only applies inside a thick cylindrical shell

(blue) whose inner diameter is r = a and whose outer diameter is r = b, where b causes this shell to touch the nearest other conductor, as illustrated here,

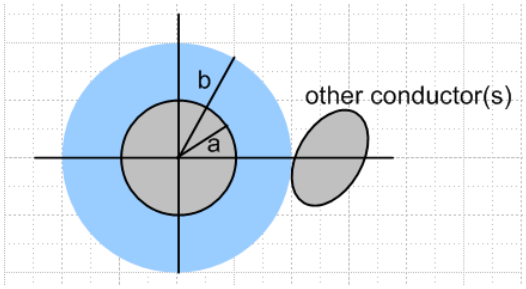

Fig D.3

The reason is that the dielectric E-field wave (Helmholtz) equation is not valid inside the "other conductor", so the form (D.7.2) cannot apply in a region which includes any of this other conductor. Since the blue shell region does not include r = ∞, one cannot rule out coefficients like A_m and C_m. One is now stuck worrying about boundary conditions at r = b and the whole problem becomes intractable. But if one could find the complete exact exterior solution, one would find that inside the blue cylindrical shell the solution's partial wave fields would have the form shown in (D.7.2).

Reader Exercise:

(a) Verify (D.7.2).

(b) In Chapter 6 a transmission line with two round conductors is solved "exactly". Convert the solution to a coordinate system like that shown above, compute the $E_i(r,m)$ using (D.1.3b), and verify that these E_i field components fit into the form shown in (D.7.2).

D.8 About the boundary condition $E_\theta(a,m) = 0$

We start with a quick review. In earlier sections of this Appendix we examined the electric field inside a round wire (radius a) which was regarded as a conductor in a straight transmission line. The electric field was assumed to have the form of a longitudinal wave traveling down the conductor,

$$\mathbf{E}(r,\theta,z,t) = e^{j(\omega t - kz)}\,\mathbf{E}(r,\theta)\,, \qquad (D.1.1)$$

where k is the wavenumber parameter of the surrounding dielectric medium. We expanded the function $\mathbf{E}(r,\theta)$ onto azimuthal partial waves $e^{jm\theta}$ and solved the Helmholtz wave equation inside the wire with solutions as shown in box (D.2.21),

$$E_z(r,m) = -j\,(\beta'/k)\,\frac{K_m}{2}\,J_m(x) \qquad x = \beta' r \qquad (D.1.27)$$

$$E_r(r,m) = a_m\,x^{-1}\,J_m(x) + \frac{K_m}{2}\,J_{m+1}(x)\,. \qquad (D.2.11)$$

$$jE_\theta(r,m) = -a_m\,x^{-1}\,J_m(x) + \left(\frac{K_m}{2} + \frac{a_m}{m}\right)J_{m+1}(x)\,. \qquad (D.2.15)$$

where $\beta'^2 = \beta^2 - k^2$ with β being the (complex) wavenumber parameter of the conductor, and where a_m and K_m are undetermined constants.

At this point we applied the two boundary conditions, assuming a non-conducting dielectric,

$$E_r(r=a,m) = (j\omega/\sigma)\, N_m \qquad (D.2.26)$$

$$E_\theta(r=a,m) = 0 \ . \qquad (D.2.27)$$

where N_m is the mth partial wave moment of the surface charge $n(\theta)$ distribution, where

$$n(\theta,z,t) = e^{j(\omega t - kz)}\, n(\theta) \ . \qquad (D.1.4)$$

These conditions determined the constants a_m and K_m giving the resulting **E** field inside the wire,

$$E_z(r,m) = (1/4)\,\eta_m\, I\, R_{dc}\, (a\beta')\left[\frac{J_m(x)}{J_{m+1}(x_a)} - \frac{J_m(x)}{J_{m-1}(x_a)}\right] \qquad a = \text{radius} \qquad \eta_m \equiv \frac{N_m}{N_0} \qquad (D.2.33)$$

$$E_r(r,m) = (j/4)\,\eta_m\, I\, R_{dc}\, (ak)\left[\frac{J_{m+1}(x)}{J_{m+1}(x_a)} + \frac{J_{m-1}(x)}{J_{m-1}(x_a)}\right] \qquad x = \beta' r$$

$$E_\theta(r,m) = (1/4)\,\eta_m\, I\, R_{dc}\, (ak)\left[\frac{J_{m+1}(x)}{J_{m+1}(x_a)} - \frac{J_{m-1}(x)}{J_{m-1}(x_a)}\right] \qquad x_a = \beta' a$$

where $R_{dc} = 1/(\pi a^2 \sigma)$ is the DC resistance of the wire per unit length, and I is the amplitude of the current in the wire. Everything is an implicit function of frequency ω. It was noted that, for $|k/\beta'| << 1$, the fields E_r and E_θ are much smaller than E_z, and this is the case for f ~ 100 GHz or below (but not too small).

An implication of the solution is that the E fields inside the wire for each partial wave are described by a single parameter N_m which is the surface charge moment noted above. If the other transmission line conductor(s) were to change their position relative to the round wire and/or to vary their cross sectional shape, the only effect this would have would be to adjust the set of parameters N_m, and the solutions would still be given by (D.2.33) quoted above. Although the set $\{N_m\}$ is infinite, it seems likely that for reasonable shapes of the other conductor(s), the lowest few N_m partial waves would provide a good approximation to the E fields inside the wire. Since Ohm's Law is assumed to apply inside the wire, one then knows in detail the current densities J_z, J_r and J_z. The magnetic field **B** inside the wire is then also known and was calculated above. The lowest moment is always $N_0 = (k/2\pi\omega a)\, I$ from (D.2.31).

As an example, the following five-conductor transmission line might be expected to have a strong m = 2 quadrupole surface charge moment N_2,

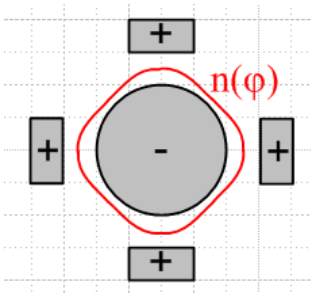

Fig D.4

A critical ingredient of our solution is the assumption that $E_\theta(r=a,m) = 0$ and that is the subject now addressed. We present two somewhat different arguments as to why $E_\theta(r=a,m) = 0$. It should be noted that King in his *Transmission-Line Theory* book always assumes that any straight transmission line conductor cross section has an equipotential surface (a ring, see for example middle p 14, top 15, 25 bottom). Due to the presence of small transverse vector potential components, $E_\theta = 0$ and "equipotential" for the scalar potential φ are not the same thing.

(a) The Quasi-Static Argument

In electrostatics, we are used to metal surfaces being equipotentials. For example, if we put a point charge q near a metal sphere, it induces a surface charge on that sphere. The electric field lines land on the sphere exactly perpendicular to the surface. One argues that if there were even some tiny E field component tangential to the surface, the surface charges would adjust their position to cancel out that tangential field. Since the situation is static, any adjustment has already been made. Since $E_{tan} = 0$, the sphere's surface is an equipotential surface.

If we were to then slowly move the charge q around (perhaps it rotates in a circle around the sphere), the surface charge instantly adjusts at each new position of q, and those E field lines remain perpendicular to the surface, and $E_{tan} = 0$. While the charges are adjusting position, there is admittedly some very tiny surface current driven by some tiny E_{tan} , but if we move the charge slowly, we are "quasi-static" and the approximation $E_{tan} \approx 0$ is very good. One might compare the time constant of the moving sphere (T, the period of q's revolution around the sphere) to the time constant of the surface charge adjustment. For copper the time constant is roughly the mean electron collision time which is on the order of 10^{-14} sec. The conclusion here is that for frequencies $<< 10^{14}$ Hz, the quasi-static situation prevails and then $E_{tan} \approx 0$ is a very good approximation.

This then is our first argument for why we claim the boundary condition $E_\theta = 0$ on the surface of the round wire in a transmission line operating at a typical frequency.

We note from our solution $E_\theta(r,m)$ that if we assume $E_\theta(a,m) = 0$ on the round wire surface, we will still have $E_\theta(r,m) \neq 0$ inside the wire. This fact is consistent with our argument above since there are no free charges available to adjust themselves inside the wire.

However: if $E_\theta = 0$ by this quasi-static argument, then we should expect that $E_z = 0$ by the same argument, since E_z is also a tangential field at the round wire surface, and since E_z operates at the same frequency ω as E_θ. But we know that $E_z \neq 0$ because $J_z \neq 0$ just below the wire surface -- there is current flowing there -- and E_z is continuous through the surface by (1.1.50). So the E field lines are not quite perpendicular to the round wire surface in the z direction. This is not too surprising since we expect everything to vary in the z direction as $e^{j(\omega t - kz)}$ so we would expect the surface not to be an equipotential in this direction.

But what happened to that quasi-static argument we just applied to E_θ ? What happened is that there is external field activity associated with the wave going down the line which forces $E_z \neq 0$. One might say the EM wave traveling down the line induces a J_z in the round wire, with its associated $E_z \neq 0$. But then perhaps this same thing could somehow happen with E_θ and then our quasi-static argument that $E_\theta = 0$ collapses. We think this could happen in fact, but only if the transmission line is driven by an apparatus which creates a "torsion wave" in the line. For example, the apparatus could drive counter-rotating

azimuthal currents onto the round wire surfaces of a twin-lead transmission line as suggested by this picture (which is not meant to imply that other field components vanish),

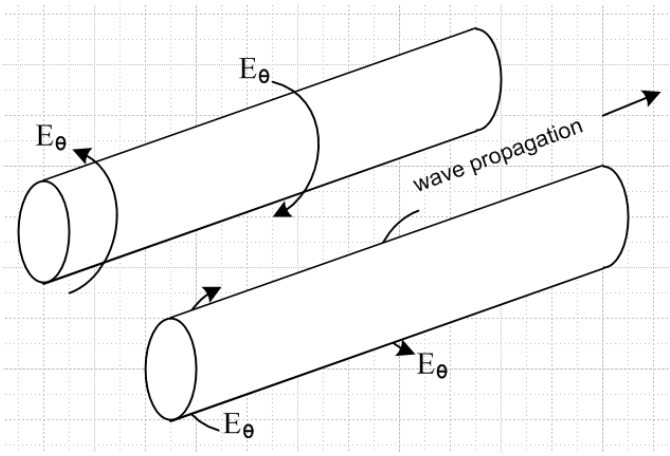

Fig D.5

It seems from our work above that such a wave would satisfy Maxwell's equations and be a viable mode of the transmission line. In this case, $E_\theta \neq 0$ because the EM wave going down the line forces $E_\theta \neq 0$, just as the normal wave forces $E_z \neq 0$.

We have not investigated whether this type of torsion wave is really viable. Whether or not it is, we assume in our transmission line discussion that this mode is not activated and that therefore the quasi-static argument for $E_\theta = 0$ is valid at the round wire surface.

(b) An Ansatz Argument

We make an ansatz that $E_r, E_\theta << E_z$ in our round wire **E** field solution, perhaps based on an expectation that most current in the wire will be longitudinal. We assume this is true, and see if this assumption is born out in a final solution of Maxwell's equations. Given that E_θ is then very small, we can make an approximation (another ansatz) that this field E_θ is exactly zero on the surface of the round wire. This may not be exactly true, but again we assume it for our purposes and see where it leads. This is the nature of an "ansatz".

When we make this assumption, the cross section of the transmission line may be regarded (Chapter 5) as a two dimensional potential theory problem -- basically a capacitor problem where one conductor has potential V/2 and the other -V/2, say (for a symmetric line, at some fixed value of z). In such a potential problem, one always assumes that the electrostatic potential φ is a constant on the surface of each conductor, and that is precisely what our ansatz says: $E_\theta = -(\nabla\varphi)_\theta = 0$, φ = constant in the θ direction. Now when we solve the capacitor problem for potential φ, that gives $\mathbf{E} = -\nabla\varphi$ in the dielectric between the conductors, and from that we may deduce $\mathbf{E} \bullet \hat{\mathbf{n}}$ at the surface of one of the conductors. For the round wire with a cylindrical coordinate system whose axis is aligned with the wire center, that field is E_r. Next, from this surface value of E_r (which will be proportional to V) we may compute the surface charge density n(θ) on the round wire using (D.2.24) which says $E_r(r=a,\theta) = (j\omega/\sigma)\, n(\theta)$. For a "fat" twin lead transmission line for example we expect this to have a bulge in n(θ) on the side of the wire facing the other wire (m = 1, dipole), since that is what happens in such a capacitor. In any event, given n(θ) we may compute the moments N_m of the surface charge using (D.1.5b) and this then provides one "boundary condition" on our coefficients a_m and K_m which appear in all the field expressions we found above,

$$E_r(r=a,m) = (j\omega/\sigma)\, N_m \,. \qquad (D.2.26)$$

But recall that, in order to carry out this entire process just described, we had to start with the assumption that $E_\theta = 0$ on the conductor cross section surface, so that we could have a capacitor problem in the first place. According to (D.1.3b), if $E_\theta(r=a,\theta) = 0$, then $E_\theta(r=a,m) = 0$, so that in fact we must have $E_r(a,m)$ being zero in all partial waves m. Thus our assumed ansatz condition is

$$E_\theta(r=a,m) = 0 \qquad (D.2.27)$$

which is then a second boundary condition on a_m and K_m. Although (D.2.27) might not be exactly true, we know it is very close to being true. More importantly, we know that the above two conditions on a_m and K_m are consistent with each other, even though both boundary conditions might be slightly wrong. We then expect them to give good values for constants a_m and K_m.

Using these "perhaps slightly wrong" boundary conditions, we obtain the solutions shown in (D.2.33). It has already been noted above that for copper conductors and normal dielectrics, $|k/\beta'| << 1$ up to at least 100 GHz. The condition $|k/\beta'| << 1$ when applied to the (D.2.33) results shows that in fact our ansatz that $E_r, E_\theta << E_z$ is born out.

There are three footnotes to the above discussion.

First, we note that the second boundary condition does not force $E_\theta(r,m) = 0$ for $r < a$ inside the wire. In fact, there will be some small azimuthal "swirling" current inside the wire even if $E_\theta(r=a,m) = 0$, and this is just a result of Maxwell's equations and their solutions above.

Second, one might make the argument that the round wire surface is an equipotential since that is the way a line is driven at the source. For example, the center conductor of a coaxial cable plugs into a tiny driving cylinder (jack) in a BNC connector and this drives only the wire surface, and it does so in an azimuthally symmetric way so that one expects to have the wire surface be an equipotential at the driving point; this equipotential surface then moves down the line as the wave progresses.

Third, we have the complication that we don't really have a purely electrostatic situation, and the potential is in fact related to **E** by equation (1.3.1) which says $\mathbf{E} = -\nabla\varphi - \partial_t \mathbf{A}$. The rescue here comes by claiming that roughly $\mathbf{A} \approx A\hat{\mathbf{z}}$ so that the transverse components A_r and A_θ are very small. In this case, we then do get $\mathbf{E} \approx -\nabla\varphi$ so that $E_\theta = 0$ is associated with constant φ on the wire surface. The argument for $\mathbf{A} \approx A\hat{\mathbf{z}}$ is that **A** is driven by **J**, and **J** is mostly in the $\hat{\mathbf{z}}$ direction, which in turn is related to our starting ansatz (see Appendix M).

D.9 About the boundary condition $E_r(a,\theta) = (j\omega/\sigma)\, n(\theta)$.

The "charge pumping boundary condition" appears in (D.2.23) and here we want to examine it more closely. Our concern is that the derivation of (D.2.23) ignores surface currents that we know exist on the surface of a transmission line conductor as the surface charge moves around in response to tangential E fields. The first issue then is to define and quantify the nature of these surface currents.

(a) The notion of Debye Surface Currents

We continue in the context of our classical treatment of the conductor surface. In Appendix E it is pointed out that the surface charge on a transmission line conductor exists in an incredibly thin surface layer we shall call the Debye layer for want of a better name. For copper the thickness λ_D of this layer is on the order of one atomic radius. In addition to the normal conduction electrons, this thin layer contains extra free electrons that are piled up just below the surface (negative surface charge) or are depleted from this thin region (positive surface charge), as shown by the red curve in Fig E.1. We want first so show :

Fact 1: In a good conductor, the volume density of free electron carriers piled up at a surface (to make up the surface charge) is negligible compared to the volume density of conduction electrons. (D.9.1)

Proof: From (E.7) the free charge density in the Debye layer (assume x is the inward surface normal direction) is given by $\rho(x) = \rho(0)\, e^{-x/\lambda_D}$. The effective free surface charge n is then given by

$$n = \int_0^\infty dx\, \rho(x) = \rho(0) \int_0^\infty dx\, e^{-x/\lambda_D} = \rho(0)\lambda_D .$$

The free electron density n_e is then

$$n_e = \rho(0)/e = n / (e\lambda_D) .$$

As a typical example, consider a parallel plate capacitor with close plate spacing s. The E field in the gap is E = V/s and the surface charge density from (1.1.47) is $n = \varepsilon E = \varepsilon V/s$. For V = 10 volts and s = 1 mm we find

$$n = \varepsilon_0 V/s = 8.85 \times 10^{-12} * 10 / 10^{-3} \approx 10^{1-12+1+3} = 10^{-7} \text{ Coul/m}^2 .$$

Then the free electron density is

$$n_e = n / (e\lambda_D) \approx 10^{-7} \text{ Cou/m}^2 / [\, 1.6 \times 10^{-19} \text{ Coul} * 10^{-10} \text{m}]$$

$$\approx 0.6 * 10^{-7+19+10} \approx 10^{22} \text{ electrons/m}^3$$

As noted in (N.1.2), in copper the conduction electron density (one electron per atom) is 10^{29} /m^3, QED.

Corollary: The conductivity σ_D inside the Debye later is basically the same as σ outside that layer. (D.9.2)

Proof: From (N.1.10) conductivity is $\sigma = (nq^2\tau/m)$ where n is the electron density. The Fact above shows that this density is the same in the Debye layer as in the bulk conductor, so $\sigma_D = \sigma$. (We ignore the possibility that the collision time τ could differ in the Debye layer vs. in the bulk volume.) QED

Consider now this crude drawing which shows a tiny slice of width dx of a piece of a transmission line conductor cross section at its surface. The yellow Debye surface charge layer is greatly exaggerated in

thickness and is modeled as if it had a clean lower boundary. Recall from the comment below Fig E.2 that at 100 GHz one has $\delta \approx 4000\,\lambda_D$ so $\delta >> \lambda_D$ at all frequencies of transmission line interest.

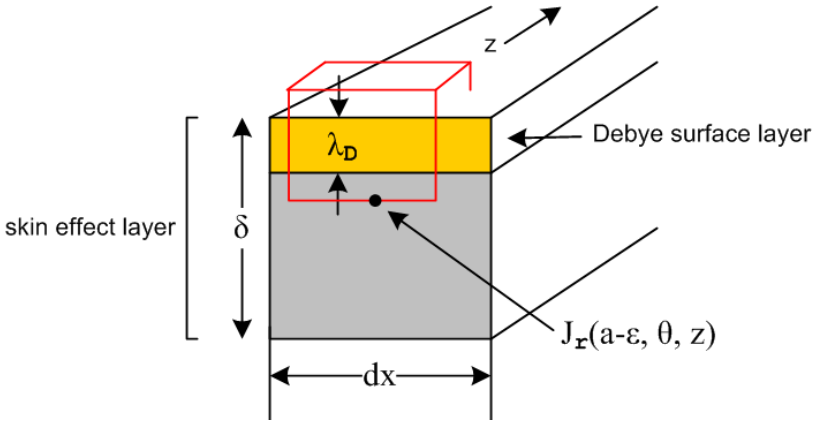

Fig D.6

The Debye layer holds the surface charge, and when this surface charge moves, one has a Debye surface current. We now show :

Fact 2: The total current in the Debye layer is negligible compared to that in the skin effect layer.

(D.9.3)

Proof: The field E_z is transverse to the conductor surface, so we know from (1.1.41) that it is continuous through the boundary at the bottom of the Debye layer. Then the ratio of the currents in the two layers is,

$$\frac{I^D}{I^\delta} = \frac{J_z^D \lambda_d\, dx}{J_z^\delta\, \delta\, dx} = \frac{\sigma_D E_z^D \lambda_d}{\sigma E_z^\delta\, \delta} = \frac{\sigma_D}{\sigma}\frac{E_z}{E_z}\frac{\lambda_D}{\delta} \approx 1 * 1 * \frac{\lambda_D}{\delta} = \frac{\lambda_D}{\delta} << 1\,. \qquad \text{QED}$$

(b) The role of Debye Surface Currents in the boundary condition

Now referring to the Debye surface currents as K_z^D and K_θ^D we reconsider the derivation of the charge pumping boundary condition of (D.2.24) where we had this figure,

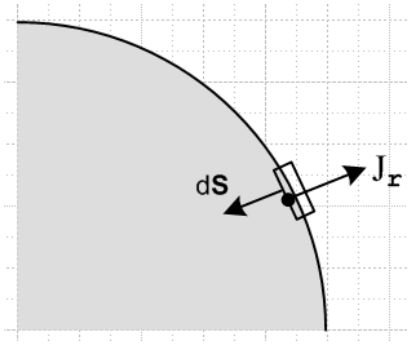

Fig D.2

If we include the Debye surface currents in the θ and z direction in our application of continuity,

$$\text{div } \mathbf{J} = -j\omega\rho \qquad \Leftrightarrow \qquad -j\omega[\int_V \rho\, dV] = \int_S \mathbf{J} \bullet d\mathbf{S}\ , \qquad \textit{(D.2.22)}$$

the result is

$$-j\omega\, n(\theta,z) = -J_r(r=a-\varepsilon, \theta, z) + \partial_z K_z(\theta,z) + (1/a)\,\partial_\theta K_\theta(\theta,z) \qquad \text{(D.9.4)}$$

where we assume that the dielectric outside the round wire is vacuum with $\sigma_d = 0$. The gaussian box selected here is that shown in red in Fig D.6. The bottom face lies below the Debye layer so $J_r(a-\varepsilon, \theta, z)$ is the value of J_r in the normal skin effect region close to the surface. The Debye surface currents may be written approximately as

$$K_z^D = J_z^D \lambda_D = \sigma_D E_z^D \lambda_D = \sigma\, E_z(r=a,\theta)\, \lambda_D \qquad \text{// dim(K) = amp/m}$$

$$K_\theta^D = J_\theta^D \lambda_D = \sigma_D E_\theta^D \lambda_D = \sigma\, E_\theta(r=a,\theta)\, \lambda_D = 0 \qquad \text{// (D.9.2) and (3.7.0)} \qquad \text{(D.9.5)}$$

where we use the Corollary above that $\sigma_D = \sigma$. From (3.7.0) we have $E_\theta = 0$ at the surface so $K_\theta^D = 0$ and we have only the Debye current K_z^D to worry about. Recall that $E_\theta(a,\theta) = 0$ is the second boundary condition (D.2.27) used in Section D.2 to evaluate the a_m and K_m coefficients, and that this condition is itself a topic of interest in Section D.8, and we assume it is valid. We then have,

$$-j\omega\, n(\theta,z) = -J_r(a,\theta,z) + \partial_z K_z^D(\theta,z)$$

$$= -J_r(a,\theta,z) + \partial_z\,[\sigma\, E_z(a,\theta,z)\, \lambda_D] \qquad \text{(D.9.6)}$$

Assuming everything has z dependence $e^{j(\omega t - kz)}$ as in (D.1.4), we replace $\partial_z \rightarrow -jk$ and then suppress the z arguments to get

$$-j\omega\, n(\theta) = -J_r(a,\theta) - jk\,[\sigma\, E_z(a,\theta)\, \lambda_D]$$

$$= -\sigma E_r(a,\theta) - jk\,[\sigma\, E_z(a,\theta)\, \lambda_D]$$

$$= -\sigma E_r(a,\theta)\left[\,1 - jk\lambda_D \frac{E_z(a,\theta)}{E_r(a,\theta)}\,\right] \ . \qquad \text{(D.9.7)}$$

If we *assume* that the second term in (D.9.7) can be ignored, we get the charge pumping boundary condition

$$E_r(r=a-\varepsilon,\theta) = (j\omega/\sigma)\, n(\theta) \qquad \textit{(D.2.24)} \qquad \text{(D.9.8)}$$

which in return yields the E fields as stated in (D.2.33) where we see that roughly

$$\frac{E_z(a,\theta)}{E_r(a,\theta)} \sim \left|\frac{\beta}{k}\right| \ . \qquad \text{(D.9.9)}$$

Thus, our self-consistent condition for ignoring the second term in (D.9.7) is

$$k\lambda_D * \frac{E_z(a,\theta)}{E_r(a,\theta)} << 1 \quad \Leftrightarrow \quad k\lambda_D * \left|\frac{\beta}{k}\right| << 1$$

$$\Leftrightarrow \quad \lambda_D |\beta| << 1 \quad \Leftrightarrow \quad \lambda_D \left| e^{j3\pi/4} (\sqrt{2}/\delta)\right| << 1$$

$$\Leftrightarrow \quad (\lambda_D/\delta) << 1 \quad \Leftrightarrow \quad (\delta/\lambda_d) >> 1 \qquad \text{// ignore } \sqrt{2}$$

But we know from above that $(\delta/\lambda_d) >> 1$ for any f < 100GHz, so for such f the second term in (D.9.7) can in fact be ignored. We have just proven:

Fact 3: For f < 100 GHz, the Debye surface currents can be ignored in the derivation of the boundary condition $E_r(a-\varepsilon,\theta) = (j\omega/\sigma)\, n(\theta)$. (D.9.10)

(c) Where does surface charge n(θ) come from?

According to our traveling-wave ansatz (D.1.1), all E field related quantities move down a transmission line at v_d as $e^{j(\omega t - kz)}$. For a low-loss line and a vacuum dielectric, $v_d \approx c$, the speed of light. Therefore,

$$n(\theta,z,t) = n(\theta,0,0)\, e^{j(\omega t - kz)} \qquad k = (\omega/v_d) \; . \qquad (D.9.11)$$

One can ponder and then discard a list of hypotheses concerning where n(θ) "comes from" as it increases and decreases over time at some location z on one of the conductors.

The first hypothesis might be that the individual electrons which make up n(θ) simply travel at v_d in the z direction down the conductor surface, and n(θ) is not fed by any radial currents inside the conductor. In this case one would have $K_z^D(\theta) = v_d\, n(\theta)$. But we know this is not what happens. Apart from the massive energy required to achieve relativistic electron velocities, we know from Appendix N.1 that the electrons in the Debye layer in fact drift along at something like ~ 1 mm/sec, just as do the regular conduction electrons in the conductor bulk.

The second hypothesis is a variation of the first, where we now allow that the Debye surface current works like any other conduction current, and when one electron moves "to the right" at some point z, a distant electron at z+L moves to the right at nearly the same time, all electrons in a long string moving to the right one position, giving the illusion that a particular electron moved very fast. This does in fact happen, and if it were *all* that happened, again we would have $K_z^D(\theta) = v_d\, n(\theta)$.

Comment : Assume some skin depth $\delta \leq a/10$ so the bulk current is flowing in a sheath of thickness δ just under the conductor surface. The total sheath current is then roughly $2\pi a\delta J_z(a,\theta)$. We can regard this current flow as due to an effective "full surface current" $K_z = J_z\, \delta$. Notice that this "surface current" is different from the "Debye surface current". Based on Fact 2 above, we certainly expect $K_z >> K_z^D$.

A third hypothesis is that somehow n(θ,z,t) is fed by azimuthal Debye surface currents, or some combination of these along with the z-directed $K_z^D(\theta)$. Our condition (3.7.0) that $E_\theta = 0$ puts a stop to the possibility of feeding by azimuthal Debye surface currents.

What we have learned from Fact 3 is that none of the above hypotheses explains where n(θ) comes from. The analysis above shows that, although the surface motions of the Debye surface charges do create Debye surface currents, these currents are so small that they play no role in div J = $-\partial_t\rho$ for the Gaussian box shown in red in Fig D.6. The charge n(θ) "comes from" inside the wire and is fed by the radial current density J_r just below the surface according to (D.2.24),

$$J_r(r=a-\varepsilon,\theta) = j\omega\, n(\theta) \qquad n(\theta) = (1/j\omega)\, J_r(a-\varepsilon,\theta) \qquad \text{(D.9.12)}$$

Here is a suggestive picture,

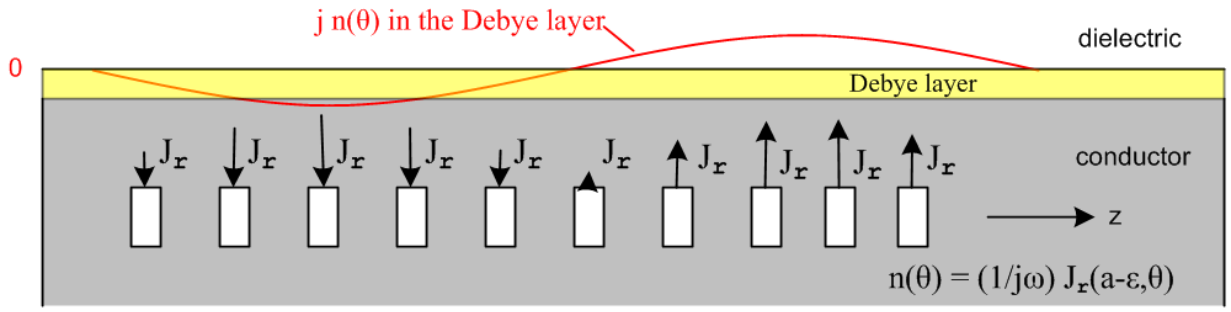

Fig D.7

where the white boxes are little "radial charge pumps" delivering the required J_r needed to feed the changing surface charge n(θ). Apart from the miniscule K_z^D , charges in n(θ) don't move in the z direction in this picture, they just appear to be doing that due to the choreographed radial pumping in and out at the wire surface. A wave front of the n(θ) wave travels at v_d, and this is just a phase velocity. In an analogous situation, in a deep ocean wave the individual particles of water travel in small ellipses and do not travel along with the wave, though there are small scale longitudinal motions due to those ellipses.

Comment: In our transmission line theory, the exterior problem in the dielectric is solved using the capacitor method, from which one learns n(θ). The boundary condition $J_r(r=a-\varepsilon,\theta) = j\omega\, n(\theta)$ couples this exterior information into the wire interior, allowing one to solve for the fields and currents inside.

In Section 6.5 we show how div **E** = 0 inside the conductor (or div **J** = 0) forces a relationship between J_r and J_z just below the conductor surface. When that relationship (6.5.18) is combined with the charge pumping boundary condition (D.9.8), one finds that

$$E_z(a,\theta) = (-j\omega/\sigma)\,(\beta/k)\, n(\theta) \qquad \textit{(6.5.19)}$$

or

$$J_z(a,\theta) = (-j\omega)\,(\beta/k)\, n(\theta)\ . \qquad \text{(D.9.13)}$$

This same result is obtained in a different manner as (6.5.13).

The "full surface current" K_z was defined in a Comment above as $K_z(\theta) = \delta\, J_z(a,\theta)$. Thus,

$$K_z(\theta) = \delta\, J_z(a,\theta) = [\delta\,(-j\omega)\,(\beta/k)]\; n(\theta) \qquad \text{(D.9.14)}$$

But

$$\frac{\beta}{k} = \frac{e^{j3\pi/4}\,(\sqrt{2}\,/\delta)}{\omega/v_d}$$

so

$$[\delta\,(-j\omega)\,(\beta/k)] = \delta\,(-j\omega)\,\frac{e^{j3\pi/4}\,(\sqrt{2}\,/\delta)}{\omega/v_d} = -j\, e^{j3\pi/4}\,\sqrt{2}\; v_d$$

$$= -j\,(j-1)/\sqrt{2}\; * \sqrt{2}\; v_d = (1+j)\, v_d$$

and we end up with

$$K_z(\theta) = (1+j)\, v_d\, n(\theta)$$

$$\mathrm{Re}(K_z(\theta)) = \mathrm{Im}(K_z(\theta)) = v_d\, n(\theta) \qquad \text{(D.9.15)}$$

Once again, this last equation gives the illusion that the surface charge density $n(\theta)$ moves "to the right" at speed v_d to create the real or imaginary part of the full δ-thick surface current K_z. This is the equation that replaces the incorrect equation $K_z^D(\theta) = v_d\, n(\theta)$ which assumes there is no radial charge pumping.

Reader Exercise: Show using **F** = m**a** and **F** = q**E** (ignore magnetic fields) that with a time-harmonic **E** field, a classical electron inside a transmission line conductor traverses a tiny elliptical path and thus never really goes anywhere. That path is traversed once per period T= $2\pi/\omega$. Mathematically, show that this amounts to proving that the three equations

$$x = A\cos(\omega t - a)$$
$$y = B\cos(\omega t - b)$$
$$z = C\cos(\omega t - c)$$

are parametric equations for an ellipse with some orientation in 3D space. As just noted above, this goes-nowhere aspect of the electron is similar to what happens with a droplet of water in an ocean wave. (Hint: first show that the first two equations describe an ellipse in the xy plane and that the semi-major axes in general are *not* A and B .)

(d) Modifications for a Conducting Dielectric

Ignoring the Debye surface currents as per section (b) above, if the dielectric has some conductivity σ_d, the charge pumping boundary condition (D.2.23) becomes

$$J_r(a-\alpha,\theta) - J_r(a+\alpha,\theta) = j\omega\, n(\theta)$$

or

$$\sigma\, E_r(a-\alpha,\theta) - \sigma_d E_r(a+\alpha,\theta) = j\omega\, n(\theta) \qquad \text{// this is div J = -j}\omega\rho$$

where $\alpha > 0$ is a tiny distance (ε is already used for dielectric constant). Another boundary condition at the surface is provided by (1.1.47) which says ($\hat{\mathbf{n}}$ points into medium 1 which is the dielectric)

$[\varepsilon_1 E_{n1} - \varepsilon_2 E_{n2}] = n_{free}$ // this is continuity of D_n at the surface

or

$[\varepsilon_d E_{r1} - \varepsilon_0 E_{r2}] = n(\theta)$

or

$[\varepsilon_d E_r(a+\alpha,\theta) - \varepsilon_0 E_r(a-\alpha,\theta)] = n(\theta)$.

A seeming third boundary condition is (1.1.48),

$\xi_1 E_{n1} = \xi_2 E_{n2}$

or

$(\varepsilon_d + \sigma_d/j\omega) E_{rd} = (\varepsilon_0 + \sigma/j\omega) E_r \approx (\sigma/j\omega) E_r$

or

$(\varepsilon_d + \sigma_d/j\omega) E_r(a+\alpha,\theta) \approx (\sigma/j\omega) E_r(a-\alpha,\theta)$.

There seem to be three boundary conditions at the round wire surface,

$\sigma E_r(a-\alpha,\theta) - \sigma_d E_r(a+\alpha,\theta) = j\omega\, n(\theta)$ // modified cpbc from div $\mathbf{J} = -j\omega\rho$ (D.9.16)

$\varepsilon_d E_r(a+\alpha,\theta) - \varepsilon_0 E_r(a-\alpha,\theta) = n(\theta)$ // div $\mathbf{D} = \rho$ (straddle) (D.9.17)

$(\varepsilon_d + \sigma_d/j\omega) E_r(a+\alpha,\theta) \approx (\sigma/j\omega) E_r(a-\alpha,\theta)$ // $\xi_1 E_{n1} = \xi_2 E_{n2}$ (D.9.18)

but only two of these conditions are independent. For example, multiply (D.9.16) by $(-1/j\omega)$ to get

$(\sigma_d/j\omega) E_r(a+\alpha,\theta) - (\sigma/j\omega) E_r(a-\alpha,\theta) = - n(\theta)$.

Adding this to (D.9.17) then gives

$(\varepsilon_d + \sigma_d/j\omega) E_r(a+\alpha,\theta) - (\sigma/j\omega) E_r(a-\alpha,\theta) = 0$

which is in fact the same as (D.9.18).

When we solve the "capacitor problem" as in Section 6.5 (a) to obtain $n(\theta)$ on the round conductor surface, we are using (D.9.17) with the assumption that $E_r(a+\alpha,\theta) >> E_r(a-\alpha,\theta)$. Typically one just says that in a good conductor $E_r(a-\alpha,\theta) = 0$ and then $n(\theta) = \varepsilon_d E_r(a+\alpha,\theta)$. That is fine, but it is not clear what happens to (D.9.16) above. The first term is the product of a large quantity σ times a small quantity $E_r(a-\alpha,\theta)$ so can be the same size as the other terms in the equation.

The resolution is provided by the discussion in Section 1.5 (c) where we encountered the equation (1.5.17)

$n_c(\mathbf{x},\omega) = (\xi_1/\varepsilon_1)\, n_s(\mathbf{x},\omega)$. *(1.5.17)*

which in our current context (1 = dielectric) becomes

$$n_c(\theta) = (\xi_d/\varepsilon_d)\, n(\theta)\ . \qquad \text{(D.9.19)}$$

In that discussion it is noted that $n(\theta)$ is the actual free surface charge density, whereas $n_c(\theta)$ is a related "transport charge density" having the same dimensions as $n(\theta)$. If we multiply (D.9.16) and (D.9.17) by (ξ_d/ε_d), our (redundant) triplet of boundary conditions becomes,

$$\begin{aligned}
&1 \quad \sigma\,(\xi_d/\varepsilon_d)\, E_r(a\text{-}\alpha,\theta) \;-\; \sigma_d\,(\xi_d/\varepsilon_d)\, E_r(a\text{+}\alpha,\theta) \;= j\omega\, n_c(\theta)\\
&2 \quad \xi_d\; E_r(a\text{+}\alpha,\theta) \;-\; (\xi_d/\varepsilon_d)\,\varepsilon_0\, E_r(a\text{-}\alpha,\theta) \;=\; n_c(\theta)\\
&3 \quad \xi_d E_r(a\text{+}\alpha,\theta) \approx \xi\, E_r(a\text{-}\alpha,\theta)\ . \qquad \text{(D.9.20)}
\end{aligned}$$

We now use last of these three equations to eliminate $E_r(a+\alpha,\theta)$ in the first, which then becomes

$$\begin{aligned}
&\sigma\,(\xi_d/\varepsilon_d)\, E_r(a\text{-}\alpha,\theta) \;-\; \sigma_d\;(\xi/\varepsilon_d)\, E_r(a\text{-}\alpha,\theta) \;= j\omega\, n_c(\theta)\\
&\text{or}\\
&[\,\sigma\,\xi_d \;-\; \sigma_d\,\xi\,]/\varepsilon_d\, E_r(a\text{-}\alpha,\theta) \;= j\omega\, n_c(\theta)\\
&\text{or}\\
&[\,\sigma\,(\varepsilon_d + \sigma_d/j\omega) \;-\; \sigma_d\,(\varepsilon_0 + \sigma/j\omega)\;]/\varepsilon_d\, E_r(a\text{-}\alpha,\theta) \;= j\omega\, n_c(\theta)\\
&\text{or}\\
&[\,(\sigma\,\varepsilon_d - \sigma_d\varepsilon_0)]/\varepsilon_d\, E_r(a\text{-}\alpha,\theta) \;= j\omega\, n_c(\theta) \qquad \text{// two large terms cancelled}\\
&\text{or}\\
&[\,(\sigma - \sigma_d(\varepsilon_0/\varepsilon_d)\,]\, E_r(a\text{-}\alpha,\theta) \;= j\omega\, n_c(\theta)\ .
\end{aligned}$$

Assume now that ε_0 (conductor) and ε_d (dielectric) are the same order of magnitude, and assume that, even though the dielectric conducts, one still has $\sigma >> \sigma_d$. The last equation then reads

$$E_r(a\text{-}\alpha,\theta) \;= (j\omega/\sigma)\, n_c(\theta) \;= (j\omega/\sigma)\,(\xi_d/\varepsilon_d)\, n(\theta) \qquad \text{(D.9.21)}$$

$$E_r(a\text{-}\alpha,m) = (j\omega/\sigma)\,(\xi_d/\varepsilon_d)\, N_m\ . \qquad \text{// partial waves} \qquad \text{(D.9.22)}$$

The above are the **"modified" charge pumping boundary conditions** which replaces (D.2.24) and (D.2.25) for a mildly conducting dielectric,

$$E_r(r\text{=}a,\theta) = (j\omega/\sigma)\, n(\theta)\ . \qquad \textit{(D.2.24)}$$

$$E_r(r\text{=}a,m) = (j\omega/\sigma)\, N_m\ . \qquad \textit{(D.2.25)}$$

How then does $\sigma_d \neq 0$ alter the E field results summarized in box (D.2.33)? If we indicate $\sigma_d = 0$ quantities with no prime and $\sigma_d > 0$ quantities with a prime, then tracing through the development we find that

$$n(\theta) \rightarrow (\xi_d/\varepsilon_d)\, n(\theta) \;\equiv n'(\theta)$$

$N_m \rightarrow (\xi_d/\varepsilon_d)\, N_m \equiv N'_m$ but $\eta_m \equiv N_m/N_0$ remains the same

$K_m \rightarrow (\xi_d/\varepsilon_d)\, K_m \equiv K'_m$

$a_m \rightarrow (\xi_d/\varepsilon_d)\, a_m \equiv a'_m$

$k = \omega \sqrt{\mu_d}\sqrt{\varepsilon_d} \rightarrow \omega \sqrt{\mu_d}\sqrt{\xi_d} \equiv k'$ so $k' = \sqrt{\xi_d/\varepsilon_d}\, k$ (D.9.23)

But I never used this form for k anywhere in Appendix D up to this point!

The normalization condition (D.2.31)

$$I = 2\pi\omega\,(a/k)\,N_0 \qquad (D.2.31)$$

becomes (where I' is the total current in the wire with $\sigma_d > 0$)

$$I' = 2\pi\omega\,(a/\beta'_d)\,N_0' = 2\pi\omega\,(a/k)\sqrt{\varepsilon_d/\xi_d}\,(\xi_d/\varepsilon_d)N_0 = 2\pi\omega\,(a/k)\sqrt{\xi_d/\varepsilon_d}\,N_0 = \sqrt{\xi_d/\varepsilon_d}\; I\,. \quad (D.9.24)$$

Then for example the E_z field becomes [see below (D.2.32)],

$$E'_z(r,m) = -j(\beta'/\beta'_d)\frac{K'_m}{2} J_m(x) = -j(\beta'/\beta'_d)\,(j\omega/2\sigma)\,N'_m\left[\frac{1}{J_{m+1}(x_a)} - \frac{1}{J_{m-1}(x_a)}\right] J_m(x)$$

$$= -j(\beta'/\beta'_d)\,(j\omega/2\sigma)\,\eta_m\,N'_0\left[\frac{1}{J_{m+1}(x_a)} - \frac{1}{J_{m-1}(x_a)}\right] J_m(x)$$

$$= -j(\beta'/\beta'_d)\,[(j/4)\,(a\beta'_d)\,\eta_m\,I'\,R_{dc}]\left[\frac{1}{J_{m+1}(x_a)} - \frac{1}{J_{m-1}(x_a)}\right] J_m(x)$$

$$= (1/4)\,\eta_m\,I'\,R_{dc}\,(a\beta')\left[\frac{J_m(x)}{J_{m+1}(x_a)} - \frac{J_m(x)}{J_{m-1}(x_a)}\right]$$

and for the E_r field,

$$E'_r(r,m) = a'_m\,x^{-1}\,J_m(x) + \frac{K'_m}{2}\,J_{m+1}(x)$$

$$= [(j\omega/2\sigma)\,N'_m]\left\{\,2m\,\frac{1}{J_{m-1}(x_a)}\,x^{-1}\,J_m(x) + \left[\frac{1}{J_{m+1}(x_a)} - \frac{1}{J_{m-1}(x_a)}\right] J_{m+1}(x)\right\}$$

$$= (j/4)\,(a\beta'_d)\,\eta_m\,I'\,R_{dc}\left\{\frac{2mx^{-1}J_m(x)}{J_{m-1}(x_a)} + \frac{J_{m+1}(x)}{J_{m+1}(x_a)} - \frac{J_{m+1}(x)}{J_{m-1}(x_a)}\right\}$$

$$= (j/4)\,(a\beta'_d)\,\eta_m\,I'\,R_{dc}\left\{\frac{J_{m+1}(x)}{J_{m+1}(x_a)} + \frac{J_{m-1}(x)}{J_{m-1}(x_a)}\right\}.$$

The results (D.2.33) then become:

Second summary of the E field solutions : $R_{dc} = \frac{1}{\sigma\pi a^2}$ $\beta'^2 = \beta^2 - \beta'^2_d$ (D.9.25)

(conducting dielectric) $I' = V/Z_0$ $\xi_d = \varepsilon_d + \sigma_d/j\omega$

$k' = \sqrt{\xi_d/\varepsilon_d}\ k$ where $k = \omega\sqrt{\mu_d\varepsilon_d}$ ($I' = \sqrt{\xi_d/\varepsilon_d}\ I$ where I was for $\sigma_d = 0$)

$E'_z(r,m) = (1/4)\,\eta_m\, I'\, R_{dc}\ (a\beta')\, f_m$ $f_m = \left[\frac{J_m(x)}{J_{m+1}(x_a)} - \frac{J_m(x)}{J_{m-1}(x_a)}\right]$ $x = \beta' r$

$E'_r(r,m) = (j/4)\,\eta_m\, I'\, R_{dc}\ (a\beta'_d)\, g_m$ $g_m = \left[\frac{J_{m+1}(x)}{J_{m+1}(x_a)} + \frac{J_{m-1}(x)}{J_{m-1}(x_a)}\right]$ $x_a = \beta' a$

$E'_\theta(r,m) = (1/4)\,\eta_m\, I'\, R_{dc}\ (a\beta'_d)\ h_m$ $h_m = \left[\frac{J_{m+1}(x)}{J_{m+1}(x_a)} - \frac{J_{m-1}(x)}{J_{m-1}(x_a)}\right]$

Conclusion: Turning on σ_d causes the total current to "increase" from I to $I' = \sqrt{\xi_d/\varepsilon_d}\ I$, which seems intuitive since the total current now has to feed the conductance between the conductors. However, the E field solutions have exactly the same form they had when $\sigma_d = 0$ when expressed in terms of the new larger current I' and the new β'_d. This β'_d differs from the k for $\sigma_d = 0$, and this then gets mapped into a slight difference in β' since $\beta'^2 = \beta^2 - \beta'^2_d$.

D.10 Symmetry and the high frequency limit of the round wire E fields

Recall from (D2.2.33) that,

Summary of the E field solutions : $R_{dc} = \frac{1}{\sigma\pi a^2}$ $\beta'^2 = \beta^2 - k^2$ *(D.2.33)*

$E_z(r,m) = (1/4)\,\eta_m\, I\, R_{dc}\, (a\beta')\, f_m$ $f_m = [\frac{J_m(x)}{J_{m+1}(x_a)} - \frac{J_m(x)}{J_{m-1}(x_a)}]$ $x = \beta' r$

$E_r(r,m) = (j/4)\,\eta_m\, I\, R_{dc}\, (ak)\, g_m$ $g_m = [\frac{J_{m+1}(x)}{J_{m+1}(x_a)} + \frac{J_{m-1}(x)}{J_{m-1}(x_a)}]$ $x_a = \beta' a$

$E_\theta(r,m) = (1/4)\,\eta_m\, I\, R_{dc}\, (ak)\, h_m$ $h_m = [\frac{J_{m+1}(x)}{J_{m+1}(x_a)} - \frac{J_{m-1}(x)}{J_{m-1}(x_a)}]$

(a) Symmetry of f_m, g_m and h_m and expansions for $E_i(r,\theta)$

From NIST (10.4.1) we know that for integer m,

$$J_{-m}(x) = (-1)^m J_m(x) \quad . \tag{D.10.1}$$

For f_m we find that

$$f_m = [\frac{J_m(x)}{J_{m+1}(x_a)} - \frac{J_m(x)}{J_{m-1}(x_a)}]$$

$$f_{-m} = [\frac{J_{-m}(x)}{J_{-m+1}(x_a)} - \frac{J_{-m}(x)}{J_{-m-1}(x_a)}] = -[\frac{J_m(x)}{J_{m-1}(x_a)} - \frac{J_m(x)}{J_{m+1}(x_a)}] = f_m$$

Coefficients g_m and h_m have the same symmetry,

$$g_m = [\frac{J_{m+1}(x)}{J_{m+1}(x_a)} + \frac{J_{m-1}(x)}{J_{m-1}(x_a)}]$$

$$g_{-m} = [\frac{J_{-m+1}(x)}{J_{-m+1}(x_a)} + \frac{J_{-m-1}(x)}{J_{-m-1}(x_a)}] = [\frac{J_{m-1}(x)}{J_{m-1}(x_a)} + \frac{J_{m+1}(x)}{J_{m+1}(x_a)}] = g_m$$

$$h_m = [\frac{J_{m+1}(x)}{J_{m+1}(x_a)} - \frac{J_{m-1}(x)}{J_{m-1}(x_a)}]$$

$$h_{-m} = [\frac{J_{-m+1}(x)}{J_{-m+1}(x_a)} - \frac{J_{-m-1}(x)}{J_{-m-1}(x_a)}] = [\frac{J_{m-1}(x)}{J_{m-1}(x_a)} - \frac{J_{m+1}(x)}{J_{m+1}(x_a)}] = -[\frac{J_{m+1}(x)}{J_{m+1}(x_a)} - \frac{J_{m-1}(x)}{J_{m-1}(x_a)}] = h_m$$

Thus we have shown that

$$f_{-m} = f_m$$
$$g_{-m} = g_m$$
$$h_{-m} = h_m \ . \qquad \text{(D.10.2)}$$

If the surface charge n(θ) happens to be even in θ, we know from (D.1.7) that $\eta_m = N_m/N_0 = \eta_{-m}$. In this case, the E field components in (r,θ) can be written as in (D.1.7),

$$E_i(r,\theta) = E_i(r,m=0) + 2 \sum_{m=1}^{\infty} E_i(r,m) \cos(m\theta) \qquad \text{(D.10.3)}$$

Then for even n(θ) the E fields are

$$E_z(r,\theta) = (1/4)\, I\, R_{dc}\, (a\beta')\, [\, f_0 + 2\, \Sigma_{m=1}^{\infty}\, f_m\, \eta_m\, \cos(m\theta)\,]$$

$$E_r(r,\theta) = (j/4)\, I\, R_{dc}\, (ak)\, [\, g_0 + 2\, \Sigma_{m=1}^{\infty}\, g_m\, \eta_m\, \cos(m\theta)\,]$$

$$E_\theta(r,\theta) = (1/4)\, I\, R_{dc}\, (ak)\, [\, h_0 + 2\, \Sigma_{m=1}^{\infty}\, h_m\, \eta_m\, \cos(m\theta)\,] \ . \qquad \text{(D.10.4a)}$$

For general n(θ) where η_m and η_{-m} are no longer equal we have instead

$$E_z(r,\theta) = (1/4)\, I\, R_{dc}\, (a\beta')\, [\Sigma_{m=-\infty}^{\infty}\, f_m\, \eta_m\, e^{jm\theta}\,]$$

$$E_r(r,\theta) = (j/4)\, I\, R_{dc}\, (ak)\, [\, \Sigma_{m=-\infty}^{\infty}\, g_m\, \eta_m\, e^{jm\theta}\,]$$

$$E_\theta(r,\theta) = (1/4)\, I\, R_{dc}\, (ak)\, [\, \Sigma_{m=-\infty}^{\infty}\, h_m\, \eta_m\, e^{jm\theta}\,] \ . \qquad \text{(D.10.4b)}$$

(b) High frequency evaluation of f_m, g_m and h_m and the E fields

For large ω we assume β' = β as discussed below (D.2.2).

From NIST 10.17.2, keeping a few leading terms in each inverse power expansion, we have this large x behavior for $J_m(x)$,

$$J_m(x) = (2/\pi x)^{1/2}\, \{\, \cos(w)\, [a_0(m) - a_2(m)/x^2 + O(1/x^4)] \ - \sin(w)\, [a_1(m)/x + O(1/x^3)]\,]\ \}$$

$$w = x - m\pi/2 - \pi/4 \qquad \Rightarrow \qquad e^{-jw} = e^{-j(x - m\pi/2 - \pi/4)} = e^{-jx}\, e^{jm\pi/2}\, e^{j\pi/4}$$

$$a_0(m) = 1 \qquad a_1(m) = \frac{4m^2-1}{8} \equiv c_m \qquad a_2(m) = \frac{(4m^2-1)(4m^2-9)}{128} \equiv d_m \ . \qquad \text{(D.10.5)}$$

The expansion is in fact valid for all real and complex values of the parameter m, but we shall only use the expansion for integer m. Using abbreviations c_m and d_m one gets,

$$J_m(x) = (2/\pi x)^{1/2}[\cos(w)\,(1-d_m/x^2) - \sin(w)\,(c_m/x)] \,. \qquad \text{(D.10.6)}$$

Recall that inside the round wire,

$$\delta \equiv \sqrt{2/\omega\mu\sigma} \;= \text{skin depth} \qquad // \;\; \omega\mu\sigma = 2/\delta^2 \qquad \textit{(2.2.20)}$$

$$\beta = e^{j3\pi/4}\,(\sqrt{2}\,/\delta) = (j-1)/\delta \qquad \textit{(2.2.21)}$$

so

$$x \;= \beta r = e^{j3\pi/4}\,(\sqrt{2}\,/\delta)\, r \;= (j-1)\,(r/\delta)$$

$$x_a = \beta a = e^{j3\pi/4}\,(\sqrt{2}\,/\delta)\, a \;= (j-1)\,(a/\delta)\,. \qquad \text{(D.10.7)}$$

Since x has a large positive imaginary part for small δ, so does w. Then

$$\cos(w) \;= [\,e^{jw} + e^{-jw}]/2 \;\approx\; (1/2)\,e^{-jw}$$

$$\sin(w) \;= [\,e^{jw} - e^{-jw}]/2j \;\approx\; -(1/2j)\,e^{-jw} \;= (j/2)e^{-jw}\,. \qquad \text{(D.10.8)}$$

The large-x expansion above then becomes

$$J_m(x) = (2/\pi x)^{1/2}\,(1/2)\,[e^{-jw}\,(1-\,d_m/x^2) - j\,e^{-jw}\,(c_m/x)]$$

$$= (1/2\pi x)^{1/2}\,e^{-jw}\,[\,1 - j\,c_m\,(1/x) - d_m\,(1/x^2) + \ldots\,]$$

$$= (1/2\pi x)^{1/2}\,e^{-jx}\,e^{j\pi m/2}\,e^{j\pi/4}\;[\,1 - j\,c_m\,(1/x) - d_m\,(1/x^2) + \ldots\,] \quad . \qquad \text{(D.10.9)}$$

It is not hard to show that this agrees with (2.3.5) through order 1/x. Notice that

$$e^{-jx} = e^{-j(j-1)(r/\delta)} = e^{(1+j)(r/\delta)}$$

giving a convenient hybrid form

$$J_m(x) = (1/2\pi x)^{1/2}\,e^{(1+j)(r/\delta)}\;(j)^m\,e^{j\pi/4}\;[\,1 - j\,c_m\,(1/x) - d_m\,(1/x^2) + \ldots\,] \,. \qquad \text{(D.10.10)}$$

From (D.10.10) we see by inspection that, through O(1/x),

$$\frac{J_m(x)}{J_n(x_a)} = (j)^{m-n}\sqrt{\frac{a}{r}}\;\; e^{(1+j)(r-a)/\delta}\frac{1 - j\,c_m\,(1/x) - d_m\,(1/x^2) + \ldots}{1 - j\,c_n\,(1/x_a) - d_n\,(1/x_a^2) + \ldots}$$

$$\approx \;\; (j)^{m-n}\sqrt{\frac{a}{r}}\;\; e^{(1+j)(r-a)/\delta}\;[\,1 - jc_m/x + jc_n/x_a\,] \qquad \text{(D.10.11)}$$

and

$$\frac{J_m(x)}{J_m(x_a)} = \sqrt{\frac{a}{r}}\; e^{(1+j)(r-a)/\delta} \qquad \text{// independent of m} \qquad \text{(D.10.12)}$$

Therefore for large ω,

$$g_m = \left[\frac{J_{m+1}(x)}{J_{m+1}(x_a)} + \frac{J_{m-1}(x)}{J_{m-1}(x_a)}\right] = 2\sqrt{\frac{a}{r}}\; e^{(1+j)(r-a)/\delta}$$

$$h_m = \left[\frac{J_{m+1}(x)}{J_{m+1}(x_a)} - \frac{J_{m-1}(x)}{J_{m-1}(x_a)}\right] = 0$$

$$f_m = \left[\frac{J_m(x)}{J_{m+1}(x_a)} - \frac{J_m(x)}{J_{m-1}(x_a)}\right] = (j)^{-1}\sqrt{\frac{a}{r}}\; e^{(1+j)(r-a)/\delta}\left[1 - jc_m/x + jc_{m+1}/x_a\right]$$

$$- (j)^{+1}\sqrt{\frac{a}{r}}\; e^{(1+j)(r-a)/\delta}\left[1 - jc_m/x + jc_{m-1}/x_a\right]$$

$$= -j\sqrt{\frac{a}{r}}\; e^{(1+j)(r-a)/\delta}\left[2 - 2jc_m(1/x) + j(c_{m+1}+c_{m-1})(1/x_a)\right]$$

$$\approx -2j\sqrt{\frac{a}{r}}\; e^{(1+j)(r-a)/\delta}$$

The results are then

Large ω limits of the E field solutions : $\qquad R_{dc} = \dfrac{1}{\sigma\pi a^2} \qquad \text{(D.10.13)}$

$E_z(r,m) = (1/4)\,\eta_m\, I\, R_{dc}\, (a\beta)\, f_m \qquad f_m = -2j\sqrt{\frac{a}{r}}\; e^{(1+j)(r-a)/\delta} \qquad x = \beta' r$

$E_r(r,m) = (j/4)\,\eta_m\, I\, R_{dc}\, (ak)\, g_m \qquad g_m = 2\sqrt{\frac{a}{r}}\; e^{(1+j)(r-a)/\delta} \qquad x_a = \beta' a$

$E_\theta(r,m) = (1/4)\,\eta_m\, I\, R_{dc}\, (ak)\, h_m \qquad h_m = 0$

As observed earlier, the longitudinal current J_z is much larger than the radial current J_r by factor (β/k).

Notice the standard skin effect behavior both in amplitude and phase for all field components. We saw this earlier in several places:

$E(x,\omega) = E(0,\omega)\, e^{-x/\delta}\, e^{-jx/\delta}$. $\qquad x \rightarrow (a-r) \qquad$ 1D example $\qquad$ *(2.1.8)*

$$\frac{|E_z(r)|}{|E_z(a)|} = \sqrt{\frac{a}{r}}\; e^{(r-a)/\delta} \qquad r/\delta > 3/\sqrt{2} = 2.1 \quad . \qquad \textit{(2.3.7)}$$

The configuration space fields from (D.10.4b) are then,

$$E_z(r,\theta) = (1/4)\, I\, R_{dc}\, (a\beta')\, \{-2j \sqrt{\frac{a}{r}}\, e^{(1+j)(r-a)/\delta}\}\, [\, \Sigma_{m=-\infty}^{\infty} \eta_m\, e^{jm\theta}\,]$$

$$E_r(r,\theta) = (j/4)\, I\, R_{dc}\, (ak)\, \{\ 2 \sqrt{\frac{a}{r}}\, e^{(1+j)(r-a)/\delta}\}\, [\, \Sigma_{m=-\infty}^{\infty} \eta_m\, e^{jm\theta}\,]$$

$$E_\theta(r,\theta) = 0 \qquad \eta_m = N_m/N_0\ . \qquad \text{(D.10.14)}$$

But the [...] expansions shown here are just $n(\theta)/N_0$ from (D.1.5a) where recall that

$$N_0 = (k/2\pi\omega a)\, I\ . \qquad \textit{(D.2.31)}$$

Since $R_{dc} = (\pi a^2)/\sigma$ we find,

$$(1/4)\, I\, R_{dc}(ak)\, 2\, /N_0 = (1/2)\, I\, R_{dc}\, (ak)\, 2\pi\omega a/(kI) = \quad R_{dc}\, \pi\omega a^2 \ = \ (\omega/\sigma)$$

so then for large ω (D.10.14) becomes,

$$E_z(r,\theta) = -\,(j\omega/\sigma) \sqrt{\frac{a}{r}}\, e^{(1+j)(r-a)/\delta}\ n(\theta)\, (\beta'/k)$$

$$E_r(r,\theta) = \quad (j\omega/\sigma)\ \sqrt{\frac{a}{r}}\, e^{(1+j)(r-a)/\delta}\ n(\theta)$$

$$E_\theta(r,\theta) = 0 \qquad \text{(D.10.15)}$$

Observations on the E fields for large ω

In the extreme skin effect (small δ, large ω) regime:

1. There is no azimuthal field E_θ inside or on the surface of the round wire.

2. Both E_z and E_r exhibit the standard skin effect form for amplitude and phase

3. At least for low loss situations, the ratio $E_z(r,\theta)/E_r(r,\theta) = -\,(\beta'/k)$ is very large and is constant in r and θ.

4. Both E_z and E_r *track* the surface charge density $n(\theta)$ for azimuthal dependence

5. If $n(\theta) \neq$ constant, then $J_z = \sigma E_z \neq$ constant in θ and the longitudinal current density is *asymmetric* across the round wire cross section, which is known as the proximity effect. This implies that the surface impedance Z_s is a function of θ. In Section 2.4 the surface impedance was a constant since only the m=0 partial wave was involved.

D.11 Low frequency limit of the round wire E fields

Our assumed Appendix D wave z dependence is e^{-jkz} from (D.1.1).

(a) An Inaccurate Model for Low Frequency

Recall from Chapter 4 that *for high frequencies* we derived the transmission line equations,

$$\frac{dV(z)}{dz} = -\mathbf{z}\, i(z) \qquad \frac{di(z)}{dz} = -\mathbf{y}\, V(z) \qquad \textit{(4.11.14b)}$$

and from those we derived the second order uncoupled transmission line equations,

$$\frac{d^2V(z)}{dz^2} - \mathbf{zy}\, V(z) = 0 \qquad \frac{d^2i(z)}{dz^2} - \mathbf{zy}\, i(z) = 0 \quad . \qquad \textit{(4.11.15)}$$

These last equations imply the following z-dependence for V(z) and i(z) and then presumably for all other transmission line non-power quantities (like the fields),

$$e^{-jk'z} \qquad \text{where} \qquad k' = -j\sqrt{\mathbf{zy}} = -j\sqrt{(R+j\omega L)(G+j\omega C)}$$

If in Appendix D we replace k (the wave number of the dielectric) with k', the field solutions carry through everywhere with the simple replacement k → k' and we get,

Summary of the E field solutions : $\qquad R_{dc} = \frac{1}{\sigma\pi a^2} \qquad \beta'^2 = \beta^2 - k'^2 \qquad \textit{(D.2.33)}$

$$E_z(r,m) = (1/4)\,\eta_m\, I\, R_{dc}\, (a\beta')\, f_m \qquad f_m = \left[\frac{J_m(x)}{J_{m+1}(x_a)} - \frac{J_m(x)}{J_{m-1}(x_a)}\right] \qquad x = \beta' r$$

$$E_r(r,m) = (j/4)\,\eta_m\, I\, R_{dc}\, (ak')\, g_m \qquad g_m = \left[\frac{J_{m+1}(x)}{J_{m+1}(x_a)} + \frac{J_{m-1}(x)}{J_{m-1}(x_a)}\right] \qquad x_a = \beta' a$$

$$E_\theta(r,m) = (1/4)\,\eta_m\, I\, R_{dc}\, (ak')\, h_m \qquad h_m = \left[\frac{J_{m+1}(x)}{J_{m+1}(x_a)} - \frac{J_{m-1}(x)}{J_{m-1}(x_a)}\right]$$

where we have written k' in three places. Before making further comments, we first review the high frequency situation.

<u>For large ω</u>, we show in Appendix Q that

$$\text{For large } \omega: \quad \mathrm{Re}(\beta'_d) = \omega\sqrt{LC}$$

$$\mathrm{Im}(\beta'_d) = -\frac{RC+GL}{2\sqrt{LC}} \qquad \omega >> (R/L) \text{ and } \omega >> (G/C)$$

Since the wave z dependence is

$e^{-jk'z} = e^{-jRe(k')z}\ e^{-[-Im(k')]z}$

we can interpret $Re(\beta'_d)$ as the "wavenumber" of the wave, and we know that this wavenumber = ω/v_d where v_d is the phase velocity of the wave. Thus, we identify

$$v_d = 1/\sqrt{LC}$$

in terms of which

$$Re(\beta'_d) = \omega/v_d = k$$
$$-Im(\beta'_d) = (RC+GL)(v_d/2)\ .$$

This last quantity is the attenuation parameter sometimes called α, so

$$\alpha = (RC+GL)(v_d/2)\ .$$

Thus we have a reasonable model for high frequency waves on our transmission line, including the attenuation due to the losses caused by R and G. We can go on to evaluate β'^2 and take its large ω limit,

$$\beta'^2 = \beta^2 - k'^2 = -j\mu\sigma\omega - [\omega/v_d - j\alpha]^2 \rightarrow -j\mu\sigma\omega - (\omega/v_d)^2 \approx -j\mu\sigma\omega\ .$$

In the last equality, although it seems the ω^2 term should win out at large ω, we have shown elsewhere that for any ω of transmission line interest, σ is large and v_d is large so $-(\omega/v_d)^2$ can be ignored. For example :

$f = 1000$ GHz $\qquad\qquad \omega = 2\pi \times 10^{12}$ Hz

$$\mu_0\sigma\omega = 4\pi \times 5.81 \times 2\pi \times 10^{12} = .46 \times 10^{15}$$

$$(\omega/v_d)^2 \approx (\omega/c)^2 = [2\pi \times 10^{12}/ 3\times10^8]^2 = [(2\pi/3) \times 10^4]^2 = .44 \times 10^9$$

In Section D.10 we went on to take the large β' limit of the f_m, g_m and h_m functions. This led to an interesting asymmetric J_z distribution which we associated with the proximity effect.

For small ω things are much more hazy. The main issue is that the transmission line equations quoted above are only justified from Maxwell's equations at high frequencies where the skin effect is at least starting to set in. We show in Appendix K that for the *network* model of a transmission line, the transmission line equations are valid at *all* ω. One must keep in mind that this network model is just a model, and we have shown in Chapter 4 that it does not correspond to the real world at low frequencies.

Despite this caveat, we can pretend that the transmission line equations *are* accurate at low ω and see what happens. We quote again from Appendix Q for a transmission line with G = 0 (vacuum dielectric) since this is assumed in our boundary condition (D.2.24),

For small ω: $\qquad Re(\beta'_d) = \sqrt{\omega RC/2} = \alpha$ $\qquad\qquad$ // a new α

$$- \mathrm{Im}(\beta'_d) = \sqrt{\omega RC/2} = \alpha \qquad G = 0 \text{ and } \omega << (R/L)$$

This is an extremely lossy wave, since it damps out in a half wave cycle. We then have

$$e^{-jk'z} = e^{-jRe(k')z} \; e^{-[-Im(k')]z} = e^{-j\alpha z} e^{-\sigma z} = e^{-(j+1)\alpha z} \quad .$$

This has the exact form shown in (2.1.8) so what we have here is in effect a longitudinal skin effect where the wave is trying to travel down the transmission line but it can't get very far. The longitudinal skin depth is $1/\alpha$.

We can blindly proceed and compute

$$\beta'^2 = \beta^2 - k'^2 = -j\mu\sigma\omega - \omega RC/2 \qquad \rightarrow 0 \text{ as } \omega \rightarrow 0$$

In this case, we want to take the small argument limits of f_m, g_m and h_m. We shall go ahead and do that below just for the sake of "completeness", but it should be realized that the results are not accurate.

(b) Low frequency evaluation of f_m, g_m and h_m and the E fields

In the following we consider only $m \geq 0$ since we know from (D.10.2) that $f_{-m} = f_m$, $g_{-m} = g_m$, $h_{-m} = h_m$.

The small x limit for $J_m(x)$ is given by NIST 10.7.3,

$$J_n(x) = (x/2)^n / n! \quad . \qquad \text{for } n = 0,1,2,..... \qquad \text{(D.11.14)}$$

Since J_{m-1} appears in our coefficient expressions and since m = 0 is encountered, we have to deal with m = 0 as a special case since the above limit is not valid for n = -1. To this end we use NIST 10.2.2 which is valid for integer n,

$$J_{-n}(x) = (-1)^n J_n(x) \approx (-1)^n (x/2)^n / n! \qquad \text{(D.11.15)}$$

so that $J_{-1}(x) = - J_1(x) \approx - (x/2)$. Our small-x forms of interest are then

$$J_n(x) = (x/2)^n / n! \qquad \text{for } n = 0,1,2,.....$$
$$J_{-1}(x) = - (x/2) \qquad \text{for } n = -1 \quad . \qquad \text{(D.11.16)}$$

We now examine the small x limits of f_m, g_m, and h_m .

First f_m for m > 0, and then for m = 0:

$$f_m = \left[\frac{J_m(x)}{J_{m+1}(x_a)} - \frac{J_m(x)}{J_{m-1}(x_a)}\right] = \left[\frac{(x/2)^m/m!}{(x_a/2)^{m+1}/(m+1)!} - \frac{(x/2)^m/m!}{(x_a/2)^{m-1}/(m-1)!}\right]$$

$$= \left[(m+1) (x/x_a)^m (2/x_a) - (1/m) (x/x_a)^m (x_a/2) \right]$$

$$= (x/x_a)^m \left[(m+1)\,(2/x_a) - (1/m)\,(x_a/2) \right]$$

$$\approx (x/x_a)^m\,(m+1)\,(2/x_a) \qquad \text{// as } x_a \to 0$$

$$f_0 = \left[\frac{J_0(x)}{J_1(x_a)} - \frac{J_0(x)}{J_{-1}(x_a)}\right] = \left[\frac{J_0(x)}{J_1(x_a)} + \frac{J_0(x)}{J_1(x_a)}\right] = 2\,\frac{J_0(x)}{J_1(x_a)} = 2\,\frac{1}{(x_a/2)} = 4/x_a$$

First g_m for $m > 0$, and then for $m = 0$:

$$g_m = \left[\frac{J_{m+1}(x)}{J_{m+1}(x_a)} + \frac{J_{m-1}(x)}{J_{m-1}(x_a)}\right] = \left[\frac{(x/2)^{m+1}/(m+1)!}{(x_a/2)^{m+1}/(m+1)!} + \frac{(x/2)^{m-1}/(m-1)!}{(x_a/2)^{m-1}/(m-1)!}\right]$$

$$= (x/x_a)^{m+1} + (x/x_a)^{m-1}$$

$$g_0 = \left[\frac{J_1(x)}{J_1(x_a)} + \frac{J_{-1}(x)}{J_{-1}(x_a)}\right] = \left[\frac{J_1(x)}{J_1(x_a)} + \frac{J_1(x)}{J_1(x_a)}\right] = 2\,\frac{J_1(x)}{J_1(x_a)} = 2\,(x/x_a)$$

Results for h_m are then obvious since there is only a sign change between the terms in g_m,

$$h_m = (x/x_a)^{m+1} - (x/x_a)^{m-1} \qquad h_0 = 0$$

The results are then (we replace $k \to k'$ as discussed in section (a) above) :

Small ω limit of the E field solutions : $\qquad R_{dc} = \dfrac{1}{\sigma\pi a^2}$ $\qquad$ (D.11.17)

$E_z(r,m) = (1/4)\,\eta_m\, I\, R_{dc}\, (a\beta')\, f_m$	$f_m = (r/a)^m\,(m+1)\,(2/\beta' a)$	$f_0 = 4/(a\beta')$
$E_r(r,m) = (j/4)\,\eta_m\, I\, R_{dc}\, (ak')\, g_m$	$g_m = (r/a)^{m+1} + (r/a)^{m-1}$	$g_0 = 2\,(r/a)$
$E_\theta(r,m) = (1/4)\,\eta_m\, I\, R_{dc}\, (ak')\, h_m$	$h_m = (r/a)^{m+1} - (r/a)^{m-1}$	$h_0 = 0$

For $m > 0$:

$E_z(r,m) = (1/2)\,\eta_m\, I\, R_{dc}\, (r/a)^m\,(m+1)$

$E_r(r,m) = (j/4)\,\eta_m\, I\, R_{dc}\, (ak')\, [(r/a)^{m+1} + (r/a)^{m-1}]$

$E_\theta(r,m) = (1/4)\,\eta_m\, I\, R_{dc}\, (ak')\, [(r/a)^{m+1} - (r/a)^{m-1}]$

For $m = 0$:

$E_z(r,0) = I\, R_{dc}$

$E_r(r,0) = (j/2)\, I\, R_{dc}\, (ak')\, (r/a)$

$E_\theta(r,0) = 0$

Recall now these field expansions for the case that $n(\theta)$ is an even function of θ,

$$E_z(r,\theta) = (1/4)\, I\, R_{dc}\, (a\beta')\, [\, f_0 + 2\, \Sigma_{m=1}^{\infty}\, f_m\, \eta_m\, \cos(m\theta)\,]$$

$$E_r(r,\theta) = (j/4)\, I\, R_{dc}\, (ak')\, [\, g_0 + 2\, \Sigma_{m=1}^{\infty}\, g_m\, \eta_m\, \cos(m\theta)\,]$$

$$E_\theta(r,\theta) = (1/4)\, I\, R_{dc}\, (ak')\, [\, h_0 + 2\, \Sigma_{m=1}^{\infty}\, h_m\, \eta_m\, \cos(m\theta)\,]\ . \qquad \textit{(D.10.4a)}$$

For low ω we insert the expressions above to get

$$E_z(r,\theta) = I\, R_{dc}\, [\, 1 + \Sigma_{m=1}^{\infty}\, (r/a)^m\, (m+1)\, \eta_m\, \cos(m\theta)\,]$$

$$E_r(r,\theta) = (j/2)\, I\, R_{dc}\, (ak)\, [\, (r/a) + \Sigma_{m=1}^{\infty}\, [(r/a)^{m+1} + (r/a)^{m-1}]\, \eta_m\, \cos(m\theta)\,]$$

$$E_\theta(r,\theta) = (1/2)\, I\, R_{dc}\, (ak)\, [\, \Sigma_{m=1}^{\infty}\, [(r/a)^{m+1} - (r/a)^{m-1}]\, \eta_m\, \cos(m\theta)\,]\ . \qquad \text{(D.11.18)}$$

THIS SECTION ABOVE IS ON HOLD

Observations on the E fields for small ω

2. The m = 0 term in E_z is just $E_z = IR_{dc}$ which says $J_z = \sigma\, IR_{dc} = \sigma\, I(1/\sigma\pi a^2) = I/(\pi a^2)$. This is the current one would expect in a wire carrying DC current I.

3. Assuming a non-uniform n(θ) charge density on the wire surface, the η_m moments are non-zero and one concludes that $J_z(r,\theta)$ is asymmetric even as $\omega \to 0$. This conclusion is incorrect, and the reason is that we have improperly assumed STOP

$$I = V/Z_0$$

and according to (4.11.16), where G = 0 since we assumed a non-conducting dielectric,

$$Z_0 \equiv V(z)/i(z) = \sqrt{\frac{\mathbf{z}}{\mathbf{y}}} = \sqrt{\frac{R + j\omega L}{j\omega C}} \ . \qquad (4.11.16)$$

Thus in the limit $\omega \to 0$ we get $Z_0 \to \infty$. For a finite length transmission line, as one lowers ω, one must increase the size of the termination Z_0 to maintain a properly terminated line. Thus, our situation here does not apply to taking the low frequency limit of a transmission line terminated by a fixed 75Ω or 8Ω resistor. See Section 6.5 (e) for more on this subject. The major point here is that the entire model is not valid for low ω and we cannot use it to study the limit $\omega \to 0$.