Equation of continuity with conducting dielectrics PhL 10.28.13

This doc considers a whole series of questions about the meaning of the symbols in div **J** = $-\partial_t\rho$: free charge? bound charge? conduction current? polarization current? I was confused at first, but think I got everything fully nailed down, and then the results are part of note 7 in Section 1.1 of lines doc. I found external verifications for my critical solutions.

This document seeks to answer the following simple question:

Question: What is the meaning of the Equation of Continuity in the context of one or more media which are each conducting dielectrics? We often write div **J** = $-\partial_t\rho$, but, in this context, what is the meaning of **J** and what is the meaning of ρ ?

Subsidiary questions:

(1) What is the meaning of div **D** = ρ? OK, $\rho = \rho_{free}$

(2) What is the meaning of div **E** = ρ/ε ? OK, $\rho = \rho_{free}$

(3) What is the meaning of displacement current $\mathbf{J_d} = \partial_t\mathbf{D}$? OK

(4) Is $\mathbf{J_d}$ related in some way to ρ_p ? OK

Maybe studying the conducting capacitor would help.
Maybe studying the boundary between two such media would help.
Forget transmission lines, get this stuff figured out first. *Then* do transmission lines.

Conjectures for out in the middle of a medium of ε :

D = ε**E** ?? correct

div **D** = ρ_{free} ?? correct

div **E** = $(\rho_{free} + \rho_{pol})/\varepsilon_0$?? correct

div **E** = ρ_{free}/ε ?? correct

I think I have to write this all up from dead scratch, bringing in the **P** vector, and so on. In other words, I have to write a whole book chapter on the subject of electric fields inside dielectrics, but I want them to be conducting dielectrics. This is not a standard textbook topic. And of course AC at the same time. Maybe I can avoid having to write this book chapter.

Launch. We start with Maxwell's equations in a uniform isotropic medium ε and μ. The medium can be conducting, as indicated by $\mathbf{J_c}$.

curl **H** = $\partial\mathbf{D}/\partial t + \mathbf{J_c}$ Maxwell curl H equation (1.1.1)

$\mathbf{J_d} \equiv \partial\mathbf{D}/\partial t$ // a new definition, displacement current

curl **E** = - ∂**B**/∂t	Maxwell curl E equation	(1.1.2)
div **D** = ρ_{free}	Maxwell div D equation	(1.1.3)
div **B** = 0	Maxwell div B equation	(1.1.4)
B = μ**H**	magnetic permeability μ	(1.1.5)
D = ε**E**	electric permeability ε (dielectric constant)	(1.1.6)
$\mathbf{J}_c$ = σ**E**	Ohm's Law (σ = conductivity)	(1.1.7)
div(**J**) = - ∂ρ/∂t	Equation of Continuity	(1.1.8)

In free space, we set $\mu = \mu_0$ and $\varepsilon = \varepsilon_0$. I am not sure of the meaning of the last equation, so I color it blue for now. I think ρ_{free} drives **D**, so I show that explicitly. I think **J** in the curl H equation is conduction current so I put a subscript c on it.

Question: I think I understand how $\mathbf{J}_c$ moves free charge around.
Does the displacement current $\mathbf{J}_d$ move polarization charge around? Or is that a misconception?
I have "a million questions".
Is there polarization charge on the plate of a capacitor?
Interfaces always raise extra questions not raised "out in the middle" of a medium.

1. The Conducting Dielectric Capacitor " the case n = 2 "

You have an electric field **E** in a medium which might be both dielectric and conducting. This **E** field aligns dipoles at some level, and you get some **P**, meaning **P**dV is the total amount of dipole moment in volume dV (that is why symbol **P** is used for this). In a simple model. **P** is proportional to **E**, so people usually write $\mathbf{P} = \varepsilon_0\chi_e\mathbf{E}$ [Jackson (4.36)] . I might have written this $\mathbf{P} = \chi'_e\mathbf{E}$ to have an absolute quantity. We then have this kind of capacitor picture

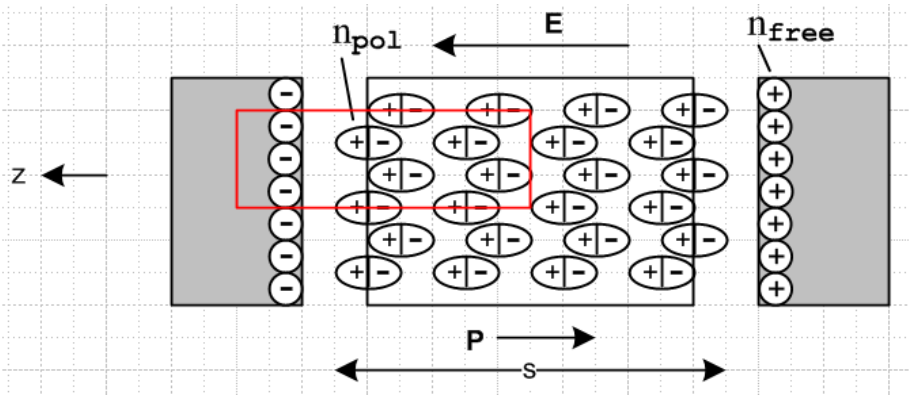

Analysis of the capacitor

1. There are no wires hooked up to the capacitor plates, they each have free charge Q.

2. Imagine the dielectric is not present and we have some E field $\mathbf{E}_0 = E_0\hat{\mathbf{z}}$. Since div $\mathbf{E}_0 = \rho_{free}/\varepsilon_0$ in this case, a gaussian pillbox tells us that $n_{free}/\varepsilon_0 = E_0$ using "the integral form". The potential across the capacitor is given by $V = \Delta\varphi = E_0 s = (n_{free}/\varepsilon_0)s$. If the area is A, then $Q_{free} = n_{free}A$. Therefore

$$V = (n_{free}/\varepsilon_0)s = sn_{free}/\varepsilon_0 = (s/\varepsilon_0)(Q_{free}/A) = Q_{free}[\, s/(A\varepsilon_0)]$$

Then $Q = CV$ tells us that $C_0 = A\varepsilon_0/s$ is the capacitance of this capacitor with no dielectric

3. We now add the dielectric, and it produces some n_{pol} as described below which partially cancels n_{free}. The same gaussian pillbox then tells us that $(n_{free} - n_{pol})/\varepsilon_0 = E$ and we end up with some $E < E_0$.

4. When the dielectric block is inserted, the dipoles rotate into a position as shown, which produces this polarization surface charge n_{pol} (volume charge ρ_{pol}) on the ends. The claim is that this bound charge ρ_{pol} is given by $\rho_{pol} = -\text{div}\ \mathbf{P}$ where $\mathbf{P}dV$ is the amount of dipole moment in volume dV. Jackson shows why this is so on page 153 where he computes the effect of **P** first on potential φ, and then on **E**. He shows that in effect, there is $\rho_{tot} = \rho_{free} + \rho_{pol}$ where $\rho_{pol} = -\text{div}\ \mathbf{P}$. Thus,

$$\text{div}\ \mathbf{E} = \rho_{tot}/\varepsilon_0 = \rho_{free}/\varepsilon_0 + \rho_{pol}/\varepsilon_0 = \rho_{free}/\varepsilon_0 - \text{div}\ \mathbf{P}\ /\ \varepsilon_0$$

5. We can then construct "a version of **E**" which "sees" only ρ_{free} as follows. I will refer to this version of **E** by the unofficial name **D'**. From the above line,

$$\text{div}\ [\ \mathbf{E} + \mathbf{P}/\varepsilon_0\ ] = \rho_{free}/\varepsilon_0$$

$$\text{div}\ [\ \mathbf{D'}\ ] = \rho_{free}/\varepsilon_0 \qquad \mathbf{D'} = \mathbf{E} + \mathbf{P}/\varepsilon_0 \qquad \text{// so } \mathbf{D'} \text{ sees only } \rho_{free}$$

6. In a simple model, **P** is proportional to **E** and we can write $\mathbf{P} = \chi'_e\mathbf{E} = \varepsilon_0\chi_e\mathbf{E}$.

7. Now write

$$\mathbf{D'} = \mathbf{E} + \mathbf{P}/\varepsilon_0 \qquad //$$

$$= \mathbf{E} + \chi_e\mathbf{E}$$

$$= (1+\chi_e)\mathbf{E}$$

$$= (\varepsilon/\varepsilon_0)\ \mathbf{E} \qquad \varepsilon = \varepsilon_0(1+\chi_e)$$

You can see that **D'** is *larger* than **E**. And notice that

$$\text{div}\ \mathbf{E} = (\varepsilon_0/\varepsilon)\ \text{div}\ \mathbf{D'} = (\varepsilon_0/\varepsilon)\rho_{free}/\varepsilon_0 = \rho_{free}/\varepsilon$$

Thus you can write div E two different ways which are really the same:

$$\text{div } \mathbf{E} = (\rho_{\mathbf{free}} + \rho_{\mathbf{pol}})/\varepsilon_0$$

$$\text{div } \mathbf{E} = \rho_{\mathbf{free}}/\varepsilon$$

8. We claim that $\mathbf{D'} = \mathbf{E}_0$, the larger E field that was there before the dielectric was inserted. We shall now prove this claim. From above we had

$$E_0 = n_{\mathbf{free}}/\varepsilon_0$$

The fact that div [$\mathbf{D'}$] $= \rho_{\mathbf{free}}/\varepsilon_0$, when applied in its integral form for the above red pillbox, says

$$D' = n_{\mathbf{free}}/\varepsilon_0 \qquad \text{// thus } D' = E_0 \quad \text{QED}$$

9. What is the new capacitance of this thing with the dielectric inserted? Our formula is Q = CV where Q is the $Q_{\mathbf{free}}$ on the plates. This quantity did not change when the dielectric was added, but I claim that V got reduced. Recall that It is V = Es and E used to be E_0 but it is now reduced to E so V is less. In fact

$$E = (\varepsilon_0/\varepsilon)\, D' = (\varepsilon_0/\varepsilon)\, n_{\mathbf{free}}/\varepsilon_0 = n_{\mathbf{free}}/\varepsilon$$

$$V = Es = s n_{\mathbf{free}}/\varepsilon = s(Q_{\mathbf{free}}/A)/\varepsilon = Q_{\mathbf{free}}[\, s/(A\varepsilon)]$$

$$\Rightarrow \; C = A\varepsilon/s \qquad \text{// compare to } C_0 = A\varepsilon_0/s$$

The capacitance has increased by factor $\varepsilon/\varepsilon_0$.

10. Review: The meaning of $\mathbf{D'}$ is that it is the E field that would be there if there were no dielectric, in a situation where free surface charges stay the same before and after dielectric is added. Due to the dielectric presence, the resulting E field is $E = (\varepsilon_0/\varepsilon)\, \mathbf{D'}$ which is reduced. Or $E = D' - P/\varepsilon_0$ which again shows E is reduced relative to D'.

11. Why is D called "displacement" ? This is a somewhat tricky question. First of all, in the Maxwell curl H equation the right side is $J_{\mathbf{c}} + \partial_{\mathbf{t}} D$, conduction current plus "displacement current". $\partial_{\mathbf{t}} D$ is a current because it has the units of a current. You might think that $J_{\mathbf{d}} \equiv \partial_{\mathbf{t}} D$ arises just from the displacement of the bound charge in the dielectric. You can see how the bound charge gets "displaced" to the left or right by the applied E field. But it turns out this is just one term of $J_{\mathbf{d}}$ and the other term has the name "vacuum displacement" in which nothing is displaced at all, it is just a term. We have

$$\mathbf{J_d} = \mathbf{J_p} + \mathbf{J_v} = \text{polarization current + vacuum displacement current}$$

$$= \partial_{\mathbf{t}}\mathbf{P} + \varepsilon_0 \partial_{\mathbf{t}} \mathbf{E}$$

and the curl equation says curl $\mathbf{H} = \mathbf{J_c} + \mathbf{J_d}$. The extra term is necessary so that div (RHS) = 0 since this is true of the LHS. I show this fact below from P&P. So the "displacement current" is due to the "displacement" or "polarization" of the dielectric bound charge, *and* due to the "displacement" of the vacuum. Since the displacement current is $\partial_t \mathbf{D}$, the field **D** is called "the displacement". So that is the long answer to the question. Ampere did not know about this vacuum term, and Maxwell is credited for deducing its presence for time-varying fields. Without this term, there would be light, no plane waves.

I have a PDF now DJVU which discusses the history here, I just read some of it (Selvan) and Jackson has had some comments on this subject.

12. It happens that the official displacement **D** is defined by $\mathbf{D} = \varepsilon_0 \mathbf{D}'$ and so **D** does not then have the same scale as **E** due to the extra factor ε_0. We can then translate the above equations:

div [$\mathbf{E} + \mathbf{P}/\varepsilon_0$] = $\rho_{free}/\varepsilon_0$

div [$\varepsilon_0\mathbf{E} + \mathbf{P}$] = ρ_{free}

div [$\mathbf{D}$] = $\rho_{free}/\varepsilon_0$ $\quad\quad$ $\mathbf{D} = \varepsilon_0\mathbf{E} + \mathbf{P}$ $\quad\quad$ // so **D** sees only ρ_{free}

Since $\mathbf{D}' = \mathbf{E} + \mathbf{P}/\varepsilon_0$, we find that $\mathbf{D} = \varepsilon_0\mathbf{D}'$

In a simple model, **P** is proportional to **E** and we can write $\mathbf{P} = \chi'_e\mathbf{E} = \varepsilon_0\chi_e\mathbf{E}$. Now write

$\mathbf{D} = \varepsilon_0\mathbf{E} + \mathbf{P}$ //

$= \varepsilon_0\mathbf{E} + \varepsilon_0\chi_e\mathbf{E}$

$= \varepsilon_0(1+\chi_e)\mathbf{E}$

$= \varepsilon\mathbf{E}$ $\quad\quad$ $\varepsilon = \varepsilon_0(1+\chi_e)$ $\quad\quad$ // as before

The scaling of D is chosen so that $\mathbf{J_d} = \partial_t \mathbf{D}$

13. Superposition of conductivity. If we suddenly turn on σ in the dielectric, we get $\mathbf{J_c} = \sigma\mathbf{E}$. This is fine, but to maintain steady state, we need now to supply a DC current to the plates to feed this current. Basically we just have a capacitor and a resistor in parallel. Without this DC current, Q_{free} would drop to 0 being exhausted by supplying J_c.

14. *The notion of bound-charge current*. It seems clear that as the molecules rotate under the effect of a changing E field, it is as if we had a flow of charge in our dielectric moving left and right under the AC signal. The actual bound charge at the left plate does not in fact physically move to a position outside the right plate. This is really the same as with a conduction current J_c where the actual electrons which enter at one end of a resistor are not the same electrons that emit from the other end.

So how do you come up with an expression for the bound charge current J_d ?

Here is a sequence the seems logical:

a) we know that $\rho_b = -$ div $\mathbf{P}$

b) since bound charge cannot be converted to free charge, you would think that continuity would apply separately to bound charge and we would write [this is verified below]

$$\partial_t \rho_b = -\text{ div } \mathbf{J}_b$$

where $\mathbf{J}_b$ is a current associated with the movement of bound charge.

c) applying ∂_t to (a) tells us that

$$\partial_t \rho_b = -\text{ div } \partial_t \mathbf{P}$$

d) Comparing this with (b) suggests that

$$\text{div } \mathbf{J}_b = \text{div } \partial_t \mathbf{P}$$

One possible solution would be

$$\mathbf{J}_b = \partial_t \mathbf{P} + \text{curl } \mathbf{F} \quad \text{for any } \mathbf{F} \qquad \text{// since div curl F = 0}$$

but in fact the correct solution is just what you would think

$$\mathbf{J}_b = \partial_t \mathbf{P}$$

e) We know that $\mathbf{D} = \varepsilon_0 \mathbf{E} + \mathbf{P}$ which says

$$\mathbf{P} = \mathbf{D} - \varepsilon_0 \mathbf{E}$$

$$\partial_t \mathbf{P} = \partial_t \mathbf{D} - \varepsilon_0 \partial_t \mathbf{E}$$

or

$$\mathbf{J}_p = \mathbf{J}_d - \varepsilon_0 \partial_t \mathbf{E}$$

Note that $\mathbf{J}_p$ and $\mathbf{J}_d$ are not the same due to this extra "Maxwell term".

f) So, there is this *other* current J_d called the displacement current which is

$$\mathbf{J}_d = \partial_t \mathbf{D}$$

so that

$$\partial_t \mathbf{P} = \mathbf{J}_d - \varepsilon_0 \partial_t \mathbf{E}$$

g) comparing to the above, we then have

$$\mathbf{J_b} = \partial_t \mathbf{P} + \text{curl } \mathbf{F} = \mathbf{J_d} - \varepsilon_0 \partial_t \mathbf{E} + \text{curl } \mathbf{F}$$

Is there some **F** such that

$$\text{curl } \mathbf{F} = \varepsilon_0 \partial_t \mathbf{E} \quad ?$$

I don't think so. Also I like the idea that **F** = 0. Then

$$\mathbf{J_b} = \partial_t \mathbf{P}$$

If **P** is not changing in time, then there is no bound current!

h) my conclusion is this

$$\mathbf{J_b} = \mathbf{J_d} - \varepsilon_0 \partial_t \mathbf{E}$$

which says the bound-charge current is not the same as the displacement current. With Ohm's law

$$\mathbf{J_b} = \mathbf{J_d} - (\varepsilon_0/\sigma) \partial_t \mathbf{J_c}$$

This is a fairly strange relationship between the three kinds of currents.

Can I find external support for these conclusions?

Consider Panofsky p121 hardback. In (7-54) they show

$$\mathbf{j_{tot}} = \mathbf{j_{true}} + \partial_t \mathbf{P} + \text{curl } \mathbf{M}$$

For P&P, "true current" p 117 = "motion of true charges". The call $\partial_t \mathbf{P}$ the "polarization current" which I like. The last item is "magnetization current" . All fine. So at least I am not alone in talking about my bound-charge current $\mathbf{J_b}$ which is their polarization current. We then come to page 121 Sec 7-12 as quoted above with the three kinds of current. Now they claim this fact:

$$\text{div } \mathbf{j_{tot}} = -\partial_t \rho_{tot}$$

Now let's follow carefully on p 122. He replaces $\rho_{tot} = \varepsilon_0 \text{ div } \mathbf{E}$ which is fine and result is (7-58). Now he claims that

$$\text{div } \partial_t P + \varepsilon_0 \text{div } \partial_t E = \text{div } D \qquad \text{because} \qquad \text{div } P + \varepsilon_0 \text{ div } E = \text{div } D$$

$$\text{because} \qquad P + \varepsilon_0 E = D$$

This leads to (7-59), fine. I agree then that div $\mathbf{j_{tot}} \neq 0$. Something with a non-zero divergence is called "not solenoidal". The B field for example is "solenoidal", fine.

They say: if you add the mystery term $\varepsilon_0 \partial_t \mathbf{E}$ to the total current, you get some new current they call **c** which does have div **c** = 0. Why is that important? [see below] This extra term is "vacuum displacement current". This one is present, but there are no physical carriers!

So I think this is the upshot of this discussion:

$$\mathbf{c} = \mathbf{j}_{tot} + \mathbf{j}_P + \mathbf{j}_V + \mathbf{j}_M = \mathbf{j}_{true} + \mathbf{j}_V$$

$$= \sigma\mathbf{E} + \partial_t \mathbf{P} + \varepsilon_0 \partial_t \mathbf{E} + \text{curl } \mathbf{M}$$

$$= \sigma\mathbf{E} + \partial_t \mathbf{D} + \text{curl } \mathbf{M}$$

and the Maxwell equation says

$$\text{curl } \mathbf{B} = \mu_0 \mathbf{c} \qquad \text{// P\&P (8.2)}$$

Aha. Here is the problem, suppose you try this:

$$\text{curl } \mathbf{B} = \mu_0 \mathbf{j}_{tot} \qquad \text{// not true}$$

Apply div to both sides, and on left you get 0 and on right you do not get 0 ! That is the problem Maxwell noticed. The vector field curl B is solenoidal, so the RHS has to be solenoidal as well, and that is fixed up by adding the extra piece!

You can absorb the curl **M** current into **H** and then you get

$$\text{curl } \mathbf{H} = \sigma\mathbf{E} + \partial_t \mathbf{D} \qquad \text{// (8-5)}$$

I will not get into details of M, but now I ask the question which is the main topic of this whole document: <u>What are the valid Continuity Equations?</u>

Since the extra current term $\mathbf{j}_V = \varepsilon_0 \partial_t \mathbf{E}$ does not involve any charges, it is never part of a continuity equation. So at least we have one fact.

The remaining three kinds of current DO involve charges, and P&P claim that

$$\text{div } \mathbf{j}_{tot} = -\partial_t \rho_{tot} \qquad \text{// p 122 near the top}$$

So at least I have one meaning for Continuity.

Now, we have three kinds of charges:

free charges supporting the conduction current $\mathbf{J}_c$ of Ohm's Law

bound charges supporting the polarization current $\mathbf{J}_P = \partial_t \mathbf{P}$

bound charges "going in circles" which support the magnetization current $\mathbf{J}_M = \text{curl } \mathbf{M}$

I am willing for now to ignore the third kind of charge, and say there are only two kinds of charge. I then argue that you cannot convert between free charge and bound charge, modulo ionization which I don't care about. So each of these two kinds of charge ought to be conserved separately. Thus, I conjecture the following extra Continuity equations

div $J_{p} = -\partial_{t}\rho_{p}$
div $J_{c} = -\partial_{t}\rho_{free}$
div $J_{M} = -\partial_{t}\rho_{mag}$ // just add this one since cannot convert here either.

Can I get confirmation of any of these equations?

Green Jackson never really talked about even a polarization current.

MIT OpenCourseWare has some Haus and Melcher PDF stuff:

This is a book on Amazon, 742 pages 1989. It has good reviews, is out of print, the chapters appear in the MIT course, and I think I can get a full pdf. Done. No copyright page, no page numbers, yes TOC, no index, 11.18 MB. These two are current MIT big shots and I think I can believe what their book says. This looks like an extremely good and practical book. It does in fact have a lot on transmission lines, but I don't see the King gauge. I tried scribd with an upload of P&P errata as payment, but it is just the same file and had to use IE and it failed anyway.

They start off with

6.2 LAWS AND CONTINUITY CONDITIONS WITH POLARIZATION

With the unpaired and polarization charge densities distinguished, Gauss' law becomes

$$\nabla \cdot \epsilon_o \mathbf{E} = \rho_u + \rho_p \tag{1}$$

where (6.1.6) relates ρ_p to $\mathbf{P}$.

$$\rho_p = -\nabla \cdot \mathbf{P} \tag{2}$$

which is fine by me. They then say all of my words and claim finally that

Hence, we compare these last two equations and deduce that the polarization current density is

$$\mathbf{J}_p = \frac{\partial \mathbf{P}}{\partial t} \tag{9}$$

Note that $\mathbf{J}_p$ and ρ_p, via (2) and (9), automatically obey a continuity law having the same form as the charge conservation equation, (2.3.3).

$$\nabla \cdot \mathbf{J}_p + \frac{\partial \rho_p}{\partial t} = 0 \tag{10}$$

So there is one support vote for a separate continuity equation for polarization current and polarization charge.

Note that EQS approximation means electroquasistatic approximation where curl E = 0.To me, this just means electrostatics which just means potential theory, and the MIT book has Chap 4 on that. Now here we continue:

the latter given by (9), Ampère's differential law, generalized to include polarization, is

$$\nabla \times \mathbf{H} = \mathbf{J}_u + \frac{\partial}{\partial t}(\epsilon_o \mathbf{E} + \mathbf{P}) \tag{11}$$

This law is valid whether quasistatic approximations are to be made or not. However, it is its implication for charge conservation that is usually of interest in the EQS approximation. Thus, the divergence of (11) gives zero on the left and, in view of (1), (2), and (9), the expression becomes

$$\nabla \cdot \mathbf{J}_u + \frac{\partial \rho_u}{\partial t} + \nabla \cdot \mathbf{J}_p + \frac{\partial \rho_p}{\partial t} = 0 \tag{12}$$

Where does (12) come from? There are four terms. First is obvious. for the other three:

div $\partial_t(\varepsilon_0 E + P) = \varepsilon_0 \partial_t(\text{div}E) + \partial_t \text{ div } P = \partial_t(\rho_u + \rho_p) + \partial_t \text{ div } P$

$= \partial_t \rho_u + \partial_t \rho_p + \text{div } (\partial_t P)$

and that gives (12) as stated. But of course we know that div $(\partial_t P) = -\partial_t \rho_p$ so this cancels the middle term on the previous line and we get

div $J_u + \partial_t \rho_u = 0$

so that

$$\nabla \cdot \mathbf{J}_u + \frac{\partial \rho_u}{\partial t} = 0 \tag{13}$$

So there is my other continuity equation! The authors imply that somehow you need the EQS approximation, but I don't see that. Here are the ingredients going into (13):

- the Maxwell curl **H** equation in exact form, which requires div (RHS) = 0
- the fact that div **E** = $(\rho_u+\rho_p)/\varepsilon_0$
- the fact that div **P** = $-\rho_p$.

So I don't think EQS is needed for this result.

Conclusion: Ignoring magnetization, there are three distinct Equations of Continuity. The equation is valid *separately* for polarization charge ρ_b with current J_b, and for free charge ρ_f with current J_f, and then of course for the sum. The Maxwell vacuum displacement current term does not relate to charges and does not play a role in any charge continuity equations

So all questions at the start of this doc have been answered.