More on King 1/ξ issue PhL 10.31.13

All painful stuff when I could not fathom that King 1/4πξ leading factor. I feel it is fully resolved now and one of the "plans" below is correct to the way things ended up. Just keeping this "for the record".

Let's look more closely at (old) Appendix B and the parallel plate capacitor.

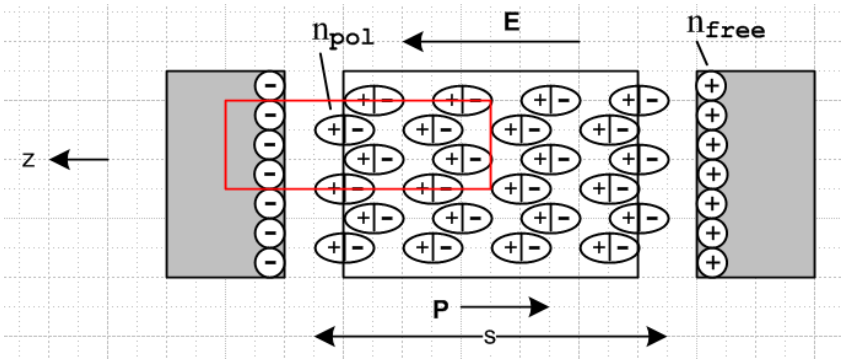

If we "turn off conductivity" and have just a capacitor and CV = Q = nA. In an AC circuit we can write I = ∂_tQ → jωQ so we have

Q = I/jω = nA => I = jωnA (B.1)

Now "turn on the conductivity" so the latent resistor appears. Then

I = jωnA + V/R R = s/(σA) // since R = V/I_R = Es/JA = (s/A)(E/J) = (s/A)(1/σ) = s/(Aσ)

or

I = jωnA + VAσ/s . (B.2)

Since I = jωQ this says

jωQ = jωnA + VAσ/s

Q = nA + VAσ/(jωs)

The current I or the charge Q now has two pieces which are out of phase.

From Gauss' box we know that

div **E** = ρ/ε ⇔ $(1/\varepsilon)\int_V \rho\, dV = \int_S \mathbf{E} \bullet d\mathbf{A}$ if ε is constant in space (1.1.19)

which tells us that

n/ε = E // no surprise there

We also know

$V = Es$ // no surprise here

$J = \sigma E$ // no surprise here either

Therefore,

$$Q = nA + VA\sigma/(j\omega s)$$

$$= (\varepsilon E)A + (Es)A\sigma/(j\omega s)$$

$$= (EA)(\varepsilon + \sigma/j\omega)$$

$$= (EA)\,\xi$$

$$= (\{V/s\}A)\,\xi$$

$$= V\,[\,A\xi/s\,]$$

$$= V\,C' \qquad \xi = \varepsilon + \sigma/j\omega$$

Again, this shows how Q and V are out of phase. We can no longer claim that Q = CV gives a simple real capacitance, we have then introduce Q = C'V if we like, where C' is complex capacitance which will involve both the real capacitance and the conductance stuff. Fine, it is all very clear.

So far I have no need for $Q_{\mathbf{eff}}$ or $n_{\mathbf{eff}}$ or anything like that.

Question: What is the DC limit of the above situation? We get $\xi \rightarrow \sigma/j\omega \rightarrow -j\infty$. We then find that

$$Q = V\,[\,A\xi/s\,] = 0.$$

The physical reason is that at $\omega = 0$, the charge just leaks away through the conducting dielectric. You then end up with

$Q = 0$ $n = 0$ $E = 0$ $J = 0$ $V = 0$

and everything has come to a complete stop.

Question: What is the potential inside the above capacitor? We know that

$\varphi(z) = -(V/s)z$ => φ has the same phase as V

$E = -\partial_{\mathbf{z}}\varphi = V/s$ // since $A_{\mathbf{z}} \approx 0$ since there is no longitudinal current in the cap

We cannot say $\varphi(z)$ is "real", only that it has the phase of V. We have seen that V and Q are out of phase.

Plan A: The notion of n_{free} versus n_{eff}

Here is a different way to approach the toy problem above. Start with

$$Q = I/j\omega = n_{free}A \quad => \quad I = j\omega n_{free}A \qquad (B.1)$$

Nothing has really been done so far. Then *assume* this

$$\text{div } \mathbf{E} = \rho/\xi \quad \text{which then} => \quad n_{free} = E\xi$$

Then since V = Es we find that

$$V = Es = (n_{free}/\xi)s = (Q/A)s/\xi = Q(s/A\xi)$$

and there is your phase shift and then

$$C = Q/V = A\xi/s$$

and there is your complex capacitance!

So the assumption of div **E** = ρ/ξ seems in this example to be *equivalent to* assuming div **E** = ρ/ε and then manually adding the resistance current. So how can this be put on a logical footing for the general case?

Maybe go back to that current adder idea:

$$Q = I/j\omega = nA \quad => \quad I = j\omega nA$$ with conductivity turned off

$$I = j\omega nA + V/R \qquad R = s/(\sigma A)$$ turned on

$$I = j\omega Q_{eff} \qquad Q_{eff} = n_{eff} A$$

Here the turning on of the resistance is the same as replacing $Q \rightarrow Q_{eff}$ and $n \rightarrow n_{eff}$ and $\rho \rightarrow \rho_{eff}$.

OK, lets go at once to the general case. In one of my puzzles.doc sections I show that in general

$$RC = (\varepsilon/\sigma)$$

for arbitrary capacitor with 3D arbitrary shapes. Now start off with

$$I = j\omega Q = j\omega \int n \, dA$$

Then manually add the resistance current to get

$$I = j\omega Q + V/R$$

which seems to violate $I = \partial_t Q$ [yes it does, see all fixed up in lines doc]

Plan B: how about a different idea. [did not go far]

We have I_{feed} in the wire feed both kinds of currents, using our current conservation at interface rule. First, at any point in the dielectric we have this fact:

$$J_{tot} = J + \partial_t D = J + j\omega\varepsilon E = \sigma E A + j\omega\varepsilon E = j\omega(\varepsilon + \sigma/j\omega)E = j\omega\xi E$$

If we look at a point just outside the surface of one of the conductors this is still true. If J_{feed} is the normal current just inside the conductor surface, we would say

$$J_{feed}(\mathbf{x}_1) = J_{tot}(\mathbf{x}_1)$$

where $\mathbf{x}_1$ is a point on the surface of conductor C_1. The total feeding current is then

$$I_{feed} = \int J_{feed}(\mathbf{x}_1) dA_1 = \int j\omega\xi E \, dA = j\omega\xi \int E dA$$

where E is the normal field at some point on the surface. We know $E = n/\varepsilon$ where n is the free surface charge, so then we have

$$I_{feed} = j\omega\xi/\varepsilon \int n dA = j\omega(\xi/\varepsilon)Q = j\omega Q_{eff} \qquad Q_{eff} = (\xi/\varepsilon)Q \qquad Q = (\varepsilon/\xi)Q_{eff}$$

So we now have an "extra" phase shift beyond the usual 90 degree one between I_{feed} and Q.

You could then say this: "From the view of the feeding current, the effect of turning on the resistance is the same as starting with the resistance off than then making the replacement $Q \rightarrow Q_{eff}$ which for the surface charge means $n \rightarrow n_{eff}$ and $\rho \rightarrow \rho_{eff}$. "

If I make this change in the φ Helmholtz integral, it gives *the wrong result*

$$\varphi(\mathbf{x},\omega) = \frac{1}{4\pi\varepsilon} \int \rho_s(\mathbf{x}',\omega) \frac{e^{-j\beta_0(\omega)R}}{R} dV' \qquad \text{resistance off}$$

$$\varphi(\mathbf{x},\omega) = \frac{1}{4\pi\varepsilon} \int (\xi/\varepsilon) \, \rho_s(\mathbf{x}',\omega) \frac{e^{-j\beta(\omega)R}}{R} dV' \qquad \text{resistance on}$$

I think the problem is that φ is related to voltage V and not to current I, so things are backwards.

Plan C: Let's try to repeat the above from a voltage perspective instead of a current perspective. But I have a problem here because it seems that potential and V does not change when resistance is turned on,

at least in my approach to things. The surface charge n does not change, it is I that changes. The feed current increases to make up for loss of n, and so n stays the same.

But suppose the feeding I were fixed by a *current source* or some mechanism. Then we have

$I_{feed} = j\omega Q_{off} = I_0$ resistance turned OFF

$I_{feed} = j\omega(\xi/\varepsilon)Q_{on} = I_0$ resistance turned ON

So with a current source supply at I_0 it is Q which is forced to change. We now have

$$(\xi/\varepsilon)Q_{on} = Q_{off}$$

$$Q_{on} = (\varepsilon/\xi)\, Q_{off}$$

So now the rule with a current source is that we have to do this

$$Q_{off} \rightarrow (\varepsilon/\xi)\, Q_{off}$$

$$Q \rightarrow (\varepsilon/\xi)\, Q$$

$$\rho_s \rightarrow (\varepsilon/\xi)\, \rho_s$$

From this perspective, we get

$$\varphi(\mathbf{x},\omega) = \frac{1}{4\pi\varepsilon}\int \rho_s(\mathbf{x}',\omega)\frac{e^{-j\beta_0(\omega)R}}{R}\, dV' \qquad \text{resistance off}$$

$$\varphi(\mathbf{x},\omega) = \frac{1}{4\pi\varepsilon}\int (\varepsilon/\xi)\, \rho_s(\mathbf{x}',\omega)\frac{e^{-j\beta(\omega)R}}{R}\, dV' \qquad \text{resistance on} \qquad R = |\mathbf{x} - \mathbf{x}'|$$

which is what I want. When we turn on the resistance, if we assume the current I stays fixed, then it is the voltage or φ that must change.

Now suppose with $A_t = 0$ we integrate φ to get V. The dV' integral in the above is over both conductors. We then have

$$\Delta V = \varphi(\mathbf{x}_1,\omega) - \varphi(\mathbf{x}_2,\omega)$$

$$= \frac{1}{4\pi\varepsilon}\int (\varepsilon/\xi)\, \rho_s(\mathbf{x}',\omega)\left[\frac{e^{-j\beta(\omega)R1}}{R_1} - \frac{e^{-j\beta(\omega)R2}}{R_2}\right]dV' \qquad R_1 = |\mathbf{x}_1 - \mathbf{x}'| \qquad R_2 = |\mathbf{x}_2 - \mathbf{x}'|$$

In the electrostatic limit we get

$$\Delta V = \frac{1}{4\pi\xi}\int_{C1+C2} \rho_s(\mathbf{x}',\omega)\, [\, 1/R_1 - 1/R_2]\, dV'$$

$$= \frac{1}{4\pi\xi} \int_{C1+C2} n_s(\mathbf{x}',\omega) \, [\, 1/R_1 - 1/R_2] \, dS'$$

where I manage to convert to a surface integral over both conductors instead of a volume integral. We then have

$$\Delta V_{off} = \frac{1}{4\pi\varepsilon} \int_{C1+C2} n_s(\mathbf{x}',\omega) \, [\, 1/R_1 - 1/R_2] \, dS'$$

$$\Delta V_{on} = \frac{1}{4\pi\xi} \int_{C1+C2} n_s(\mathbf{x}',\omega) \, [\, 1/R_1 - 1/R_2] \, dS'$$

Meanwhile I guess we can say

$Q = \int_{C1} n_s(\mathbf{x}',\omega) \, dS'$ = we imagine this stays fixed, and also n_s stays fixed as we turn ON.

Then we have

$\Delta V_{off} = Q/Z_{off}$ $\quad$ Z_{off} = C, the capacitance

$\Delta V_{on} = Q/Z_{on}$

Then

$$\Delta V_{off}/\Delta V_{on} = Z_{on}/Z_{off} = \frac{1}{4\pi\varepsilon} / \frac{1}{4\pi\xi} = \xi/\varepsilon$$

$\Rightarrow$ $\quad$ $Z_{on} = (\xi/\varepsilon) Z_{off} = (\xi/\varepsilon) C = C'$, the complex capacitance

Now how would I apply the current source idea to the parallel plates? We could say

$I_0 = j\omega n_{off} A$ $\quad$ $C_{off} = A\varepsilon/s$ $\quad$ resistance turned OFF

$I_0 = j\omega n_{on} A + VA\sigma/s$ $\quad$ $C_{on} = A\xi/s$ $\quad$ resistance turned ON

This is what I want to see, now how do I make that happen analogous to the general case? For the first line I get this:

$E_{off} = n_{off}/\varepsilon$ and $n_{off} = Q_{off}/A$ $\Rightarrow$ $E_{off} = Q_{off}/(A\varepsilon)$

$V_{off} = E_{off} s = Q_{off}[s/(A\varepsilon)]$ $\Rightarrow$ $C_{off} = Q_{off}/V_{off} = (A\varepsilon/s)$

$I_{off} = j\omega n_{off} A$

Now we turn on the resistance but keep the current fixed as if a current source. Somehow we must have a reduction in Q by factor (ε/ξ) so what causes this to happen? First I want to rewrite a piece of the above

$$I_{on} = j\omega n_{on}A + V_{on}/R = j\omega Q_{on}$$

Now I want to rewrite the second term as

$$V_{on} = E_{on}s = (n_{on}/\varepsilon)s = n_{on}s/\varepsilon$$

so then we have

$$I_{on} = j\omega n_{on}A + (n_{on}s/\varepsilon)/[\, s/(\sigma A)] = j\omega n_{on}A + n_{on}\sigma A/\varepsilon = (j\omega n_{on}A\varepsilon + n_{on}\sigma A)/\varepsilon$$

$$= j\omega A n_{on}(\varepsilon + \sigma/j\omega)/\varepsilon = j\omega A\, n_{on}(\xi/\varepsilon) \qquad // Q_{on} = A\, n_{on}$$

Now do the current source thing to say

$$I_{off} = j\omega n_{off}A = I_0$$

$$I_{on} = j\omega n_{on}A(\xi/\varepsilon) = I_0$$

Then equating we find

$$n_{off} = n_{on}(\xi/\varepsilon)$$

$$n_{on} = (\varepsilon/\xi)n_{off} = \text{reduced}$$

So it is this reduced n that we put into our φ integral?

I just don't like doing it this way.

Now how do we justify this last equation? Just as I_{on} includes the effect of both currents, if we then write $I_{on} = \partial_t Q_{on} = j\omega Q_{on}$, then Q_{on} sees both currents. But you would think that $Q_{on} = n_{on}A$ just by the meaning of the variables involved! How can I make this clear and not fuzzy? We really have'

$$Q_{on}(\omega) = n_{on}(\omega)A(\xi/\varepsilon) \qquad = \text{frequency domain solution}$$

so then

$$Q = An(\xi/\varepsilon)$$

$I_{off} = j\omega n_{off} A$

$I_{on} = j\omega n_{on} A + V_{on} A\sigma/s$

$E_{on} = n_{on}/\varepsilon$ and $n_{on} = Q_{on}/A$ => $E_{on} = Q_{on}/(A\varepsilon)$

$V_{on} = E_{on}\, s = Q_o[s/(A\varepsilon)]$ => $C_{off} = Q_{off}/V_{off} = (A\varepsilon/s)$

$I_{off} = j\omega n_{off} A$

****

Now let's jump back to Chapter 4 and ignore any constants errors I may have made. We have

$$V(z) = \frac{2}{4\pi\varepsilon}\; q(z) * \{ \int_{C_1} dx'\, dy'\, a_1(x',y') [\, K_0(j\beta s_1) - K_0(j\beta s_2)] - \int_{C_2} dx'\, dy'\, a_2(x',y') [\, K_0(j\beta s_1) - K_0(j\beta s_2)] \; \} \qquad (4.2.3)$$

$\beta^2 = \mu\varepsilon\omega^2 - j\omega\mu\sigma = \omega^2\mu\,(\,\varepsilon - j\sigma/\omega) \rightarrow 0$ in the DC limit

Now in the DC limit we find $\beta \rightarrow 0$ and then $V \rightarrow 0$ just as in the capacitor example. All is then well in this limit.

If we take q(z) to have zero phase at some z of interest, V(z) in general will be complex, indicating a phase shift just as in the capacitor above! Is there a way I can recover the simple plate capacitor from the above formula? Let's give it a try. We have $a_2(x',y')$ = constant, and, since

$$\int_{C_1} dx\, dy\, a_1(x,y) = 1$$

we find that $a_2(x',y') = 1/A$, We then have

$$V(z) = \frac{2}{4\pi\varepsilon}\; q(z)/A * \{ \int_{C_1} dx'\, dy'\, [\, K_0(j\beta s_1) - K_0(j\beta s_2)] - \int_{C_2} dx'\, dy'\, [\, K_0(j\beta s_1) - K_0(j\beta s_2)] \; \}$$

$$s \equiv \sqrt{(x-x')^2 + (y-y')^2}$$

Here is a picture

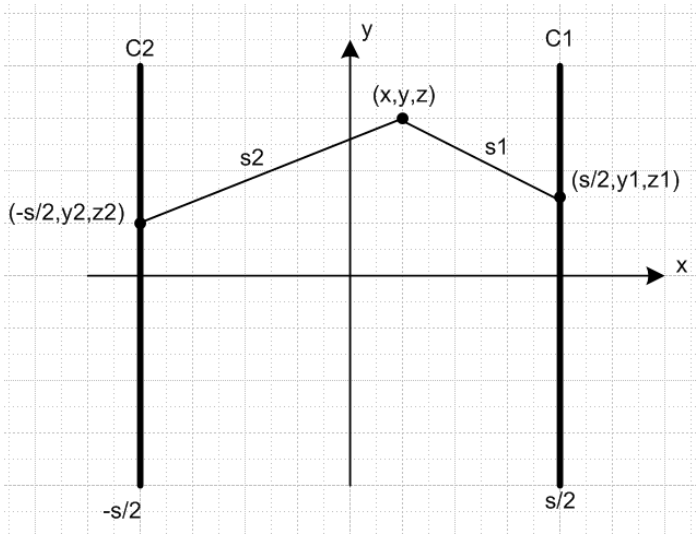

and so we have

$$s_1 = \sqrt{(x-s/2)^2 + (y-y_1)^2 + (z-z_1)^2}$$
$$s_2 = \sqrt{(x+s/2)^2 + (y-y_2)^2 + (z-z_2)^2}$$

Then we can write

$$\{\} = \{ \int_{C_1} dx'\, dy' \, [\, K_0(j\beta s_1) - K_0(j\beta s_2)] - \int_{C_2} dx'\, dy' \, [\, K_0(j\beta s_1) - K_0(j\beta s_2)] \}$$

$$= \{ \int_{C_1} dz_1\, dy_1 \, [\, K_0(j\beta s_1) - K_0(j\beta s_2)] - \int_{C_2} dz_2\, dy_2 \, [\, K_0(j\beta s_1) - K_0(j\beta s_2)] \}$$

$$\{ \int_{C_1} dx'\, dy' \, [\, K_0(j\beta s_1) - K_0(j\beta s_2)] - \int_{C_2} dx'\, dy' \, [\, K_0(j\beta s_1) - K_0(j\beta s_2)] \}$$

****

STOP, I have screwed up, it is a mess. Start over and track each item with a proper drawing. We start with this

$$\varphi_1(\mathbf{x}) = \frac{1}{4\pi\varepsilon} \int_{C_1} \rho_1(\mathbf{x}') \, \frac{e^{-j\beta R}}{R} \, dx'dy'dz' \qquad R = |\mathbf{x} - \mathbf{x}'| \qquad (4.1.1)$$

where I will take z' to be the longitudinal xline direction. Of course $\rho_1(\mathbf{x}')$ is a surface charge, but I have it expressed as a 3D charge density, that is OK. Now consider

$$\rho_1(x,y,z) = a_1(x,y)\ q_1(z) \quad . \qquad (4.1.2)$$
$$C/m^3 \qquad 1/m^2 \quad C/m$$

What is going on here? I guess I just pretend a(x,y) is a smooth distribution over the conductor cross section for right now, but later it has to become a distribution with some kind of δ stuff. Next we get

$$\varphi_1(x,y,z) = \frac{1}{4\pi\varepsilon} \int_{C_1} dx'\, dy'\, a_1(x',y') \int_{-\infty}^{\infty} dz'\, q(z') \frac{e^{-j\beta R}}{R} \quad . \qquad (4.1.5)$$

Let's try to compute this when C_1 is the parallel plate here. Note that $R = R_1$.

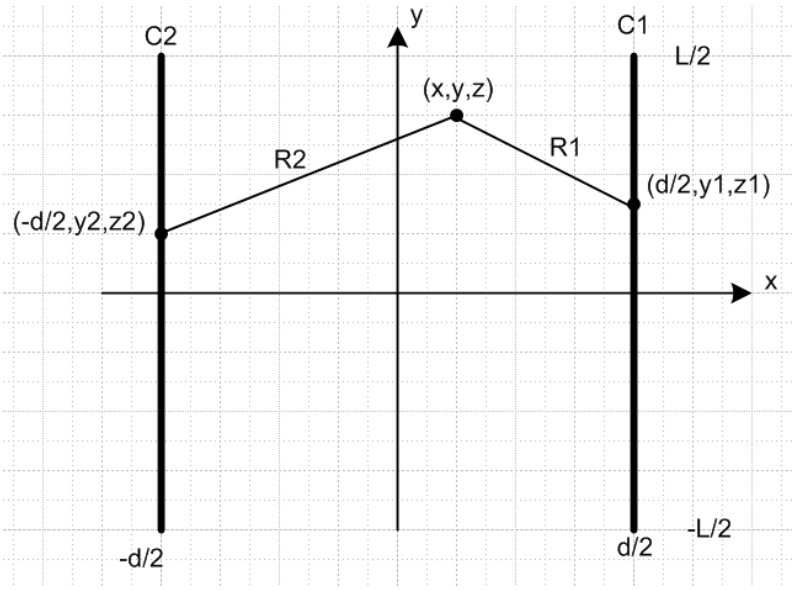

Lets now try this form

$$a_1(x',y') = \delta(x'-d/2)/L$$

Then we can confirm

$$\int_{C_1} dx'\, dy'\, a_1(x',y') = \int_{-L/2}^{L/2} dy' \int_{-\infty}^{\infty} dx'\ \delta(x'-d/2)/L$$

$$= \int_{-L/2}^{L/2} dy'\ (1/L) = 1 \ .$$

Then we get

$$\varphi_1(x,y,z) = \frac{1}{4\pi\varepsilon}\ (1/L)\ \int_{-L/2}^{L/2} dy'\ \int_{-\infty}^{\infty} dx'\ \delta(x'-d/2)\ \int_{-\infty}^{\infty} dz'\ q(z')\ \frac{e^{-j\beta R}}{R}\ .$$

$$= \frac{1}{4\pi\varepsilon}\ (1/L)\ \int_{-L/2}^{L/2} dy'\ \int_{-\infty}^{\infty} dz'\ q(z')\ \frac{e^{-j\beta R}}{R} \qquad R = R_1$$

where now R is the distance from our observation point (x,y,z) to a point (d/2,y',z') on plate 1. That is to say

$$R = R_1 = \sqrt{(x-d/2)^2 + (y-y')^2 + (z-z')^2}\ = \sqrt{(z-z')^2 + s^2}$$

where s is the transverse part of the distance

$$s = \sqrt{(x-d/2)^2 + (y-y')^2}\ .$$

Now assume that q(z) = q = total charge per distance z on the plate. Then q = Q/(dL). We seem to have

$$\varphi_1(x,y,z) = \frac{1}{4\pi\varepsilon}\ (1/L)\ q\ \int_{-L/2}^{L/2} dy'\ \int_{-\infty}^{\infty} dz'\ \frac{e^{-j\beta R}}{R} \qquad R = R_1$$

This integral is done in Appendix G as (G.11) which says

$$I_0(\mathbf{x}) = \int_{-\infty}^{\infty} dz'\ \frac{e^{-j\beta R}}{R}\ = 2\ K_0(j\beta s)\ . \qquad (G.11)$$

so we end up then with

$$\varphi_1(x,y,z) = \frac{1}{4\pi\varepsilon}\ (1/L)\ q\ 2\ \int_{-L/2}^{L/2} dy'\ K_0(j\beta\sqrt{(x-d/2)^2 + (y-y')^2}\ )$$

Wow, this seems to be the exact potential of an isolated rectangular plate with charge Q and dimensions d by L where we run at some frequency ω,

$$\beta^2 = \mu\varepsilon\omega^2 - j\omega\mu\sigma\ = \omega^2\mu\ (\ \varepsilon - j\sigma/\omega) \rightarrow 0 \text{ in the DC limit}$$

If we go to the small β limit we can use

$$K_0(z) \approx -\ln(z/2)$$

and then we have

$$\varphi_1(x,y,z) = -\frac{1}{4\pi\varepsilon}\ (1/L)\ q\ 2\ \int_{-L/2}^{L/2} dy'\ \ln(j\beta\sqrt{(x-d/2)^2 + (y-y')^2}\ /2)$$

$$\varphi_1(x,y,z) = -\frac{1}{4\pi\varepsilon}\,(1/L)\,q\,2\int_{-L/2}^{L/2} dy'\,\ln(j\beta s/2)$$

How are we doing on dimensions? Apart from the leading factor, we need C/L. We have

$$L^{-1}\,(C/L)\,L = C/L \quad \text{check}$$

Now

$$\ln(jz) = \ln(e^{j\pi}z) = j\pi + \ln(z)$$

if we want to use it. Is this a doable integral?

$$\int_{-L/2}^{L/2} dy'\,\ln(j\beta s/2)$$

First make s be the integration variable. Then.

$$s = \sqrt{(x-d/2)^2 + (y-y')^2} \qquad (y-y') = \sqrt{s^2-(x-d/2)^2}$$

$$ds = (1/2)s^{-1}\,2(y-y')dy' = s^{-1}\sqrt{s^2-(x-d/2)^2}\;dy'$$

$$dy' = ds\; s/\sqrt{s^2-(x-d/2)^2}$$

Then

$$\int_{-L/2}^{L/2} dy'\,\ln(j\beta s/2) = \int ds\; s/\sqrt{s^2-(x-d/2)^2}\;\ln(j\beta s/2)$$

$$= \int ds\; s/\sqrt{s^2-(x-d/2)^2}\;\left[\ln(j\beta/2) + \ln(s)\right]$$

Now $y' = L/2$ means $s = \sqrt{(x-d/2)^2 + (y-L/2)^2} = s_2$

Now $y' = -L/2$ means $s = \sqrt{(x-d/2)^2 + (y+L/2)^2} = s_1$

Then we have

$$\int_{-L/2}^{L/2} dy'\,\ln(j\beta s/2) = \ln(j\beta/2)\int_{s_1}^{s_2} ds\; s/\sqrt{s^2-(x-d/2)^2}$$

$$+\int_{s_1}^{s_2} ds\; s\,\ln(s)/\sqrt{s^2-(x-d/2)^2}$$

Now maybe write ln(s) = (1/2)ln(s^2) and d(s^2) = 2sds = dz so integrals are then

$$\int_{-L/2}^{L/2} dy' \ln(j\beta s/2) = \ln(j\beta/2)\,(1/2) \int_{s_1^2}^{s_2^2} dz/\sqrt{z-(x-d/2)^2}$$

$$+ (1/2) \int_{s_1^2}^{s_2^2} dz \ln(z)/\sqrt{z-(x-d/2)^2}$$

But these now are doable integrals

5. $$\int \frac{\ln x\,dx}{\sqrt{a+bx}} = \frac{2}{b}\left\{(\ln x - 2)\sqrt{a+bx} - 2\sqrt{a}\ln\left[\frac{(a+bx)^{1/2}-a^{1/2}}{x^{1/2}}\right]\right\} \qquad [a>0]$$

$$= \frac{2}{b}\left\{(\ln x - 2)\sqrt{a+bx} + 2\sqrt{-a}\arctan\sqrt{\frac{a+bx}{-a}}\right\} \qquad [a<0]$$

What a true mess this is. I am not sure why I am doing this problem. I just wanted to verify the formula for a parallel plate capacitor!