King meets Stakgold PhL 10.21.13

I reread this entire doc on 10.26.13 and added a comment and did a few small edits. All OK. The main point is that Poisson propagators work without line of sight, and the other point is that I derived the King boundary condition with ξ. The theme is application of Stakgold theory to the King world.

Looked through this again on 11.15.13. I see that I am still trying to find a way for current inside a conductor to propagate to the surface and then on to a point in dielectric. But this is all charge stuff here, not current, so just warning up. I think this is sufficiently "reviewed" for now.

They were after all both at Harvard for some durations.

1. The boundary effect in a potential theory Dirichlet problem. 1

2. Does the Poisson propagator penetrate blocking objects? 2

3. The Problem where Fig 1 is a conducting cylindrical capacitor 6

4. Boundary conditions on E and B at boundary between two conducting dielectrics 7

1. The boundary effect in a potential theory Dirichlet problem.

I think I still have my no-source A wave equation King problem, and am hoping here that somehow the homo boundary solution will be the A solution.

First of all, let's review in Stak notation the basic idea of things in regular potential theory. I start paging through Chapter 6.

On page 124 Stak applies Green's Theorem to u and g where g is the free space Green's which he calls E. This is a Dirichlet situation with f specified on boundary σ. Equation A just says if ξ is inside the region R_i, then the integral over R_i gets a delta hit in the second term of the LHS. If ξ is outside in the exterior region R_e then there is no hit. THEN Stak applies Green #2

$$\int_V dV\,[\,\psi\,\nabla^2\varphi - \varphi\,\nabla^2\psi\,] = \int_S dS\,[\,\psi(\,\partial\varphi/\partial n) - \varphi(\,\partial\psi/\partial n)\,] \qquad (6) \qquad \text{Green \#2}$$

and ends up with (6.63). Stak goes on, but I just wanted to point this out as a Green #2 application, which King calls Green's "symmetric" theorem.

On page 135 we get more what I am interested in. There Green #2 is applied to u and g where u solves Poisson with source q, while g has the usual definition and vanishes on boundary σ. The result is equation (6.81). Here I refers to Problem I which is the Dirichlet problem for some q and f.

$$u_I(x) = \int_R d\xi\, g(x|\xi)\, q(\xi) - \int_\sigma dS_\xi\, f(\xi)\, \partial_{\xi n} g(x|\xi)\,. \qquad \text{// note second BC term}$$

The other term in the boundary piece contains g $\partial_n u$ and since g = 0 on σ, that term does not appear. So this is the solution to the Dirichlet problem I. In (6.82) Stak refers to $-\partial_n g$ as function I. This function I is called the Poisson kernel: $I(x|\xi) \equiv -\partial_{\xi n} g(x|\xi)$.

See Chap 6 meta notes page 34 for comments on this result. The meta-meta notes are even better on this subject.

Now go off and do a little side problem. At a metal boundary, you know that $E_\perp = n/\varepsilon$, the surface charge. This follows from my lines result, where s is a point on the boundary [here s+ means just inside region]

$$[\varepsilon_1 E_\perp^{(1)}(s+) - \varepsilon_2 E_\perp(s-)^{(2)}] = n(s) \qquad (1.1.22)$$

where we set $E_\perp^{(2)}(s-) = 0$ inside the *conductor*. Now $E_\perp(s+) = -\partial_n u(s+)$ where u is the potential. Thus, if you were to study Problem II with just a point charge at ξ_1 so g is the solution, then in that problem you could say that $E_\perp(s) = -\partial_n g(s|\xi_1) = n(s)/\varepsilon$ and then $I(s|\xi_1) \equiv -\partial_{\xi n} g(s|\xi_1) = n(s)/\varepsilon$ = the induced surface charge over ε! Again, ξ_1 = location of point charge, s = point on σ.

So, when it is evaluated with the first argument a point s on σ, we can interpret the quantity $-\partial_n g$ appearing in the surface integral as the induced charge (over ε) for Problem II. The induced charge in the actual problem I would be $-\partial_{\xi n} u(s|\xi)$ and you have to solve the problem to know that quantity.

Note: If it happens that q(ξ) = 0 everywhere in our region, then we have $\nabla^2 u = 0$ inside the region which is the **homogeneous** PDE. In that case our solution is

$$u_{II}(x) = -\int_\sigma dS_\xi \, f(\xi) \, \partial_{\xi n} g(x|\xi) \qquad \text{// the homo solution, no source}$$

and we would say this was a solution to the homo PDE.

For Problem II where $q = \delta(\xi - \xi_1)$, our solution is just

$$u_{II}(x) = \int_R d\xi \, g(x|\xi) \, \delta(\xi - \xi_1) - \int_\sigma dS_\xi \, [f(\xi) = 0] \, \partial_{\xi n} g(x|\xi)$$

$$= g(x|\xi_1)$$

But I reach no conclusion here.

2. Does the Poisson propagator penetrate blocking objects?

(a) First form of the Solution

Consider this picture where the red lines are crude E field lines. Point charge q on the right, observation point x on the left. (f = 0 on σ as shown). The gray areas are conductors.

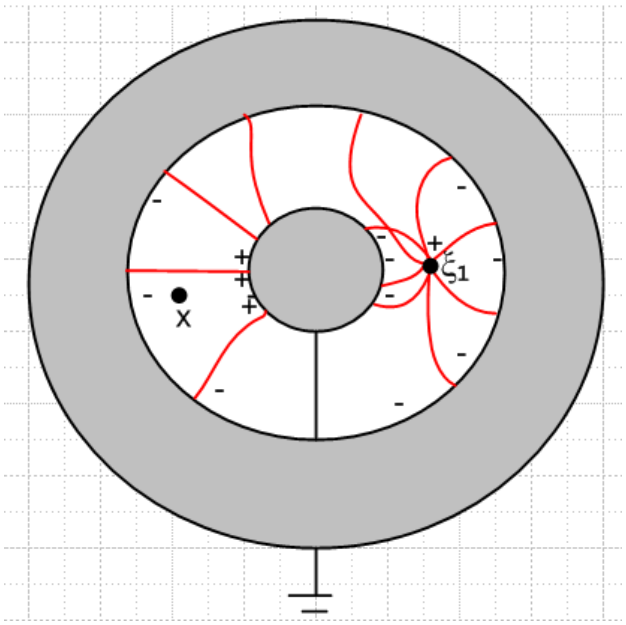

Fig 1

Consider our Problem II Green's point charge solution just noted above

$u_{II}(x) = g(x|\xi_1)$. // true g with g=0 on boundaries

You could say that the solution "propagates" from the source at ξ_1 to any point x in this way, and it does not matter one iota whether x has a line of sight path to ξ_1 [correct] So in this sense, the propagator goes right through the obstruction. Remember, however, that this is not the free propagator. We could write this as

$u_I(x) = E(x|\xi_1) + [\, g(x|\xi_1) - E(x|\xi_1) \,]$

Now you could say that the first term is the free space propagator that ignores the obstruction, but then the second difference term is what "handles" the obstruction. But it handles it the same way whether or not x and ξ_1 have a line of sight which lies entirely in the white.

Now suppose we were to replace this point charge q(x) with a little tiny cloud of charge ρ near the point drawn. And suppose at the same time we specify some f(ξ) on σ. Then we are back to

$$u_I(x) = \int_R d\xi\, g(x|\xi)\, \rho(\xi) - \int_\sigma dS_\xi\, f(\xi)\, \partial_{\xi n}\, g(x|\xi) \qquad (*)$$

Again we ask: "does the effect of the small cloud ρ make itself felt at position x, considering that the line of sight from all of the tiny charge cloud to point x is obstructed by the central piece of metal? The answer is yes, as follows. The first term in $u_I(x)$ shows the propagation of the cloud ρ to point x just as if the obstruction were completely absent, but of course g is not the free space propagator, it is the special propagator for this complicated problem in which g *knows about* the obstruction. We could write the above as

$$u_I(x) = \int_R d\xi\, E(x|\xi)\, \rho(\xi) + \int_R d\xi\, [g(x|\xi) - E(x|\xi)]\, \rho(\xi) - \int_\sigma dS_\xi\, f(\xi)\, \partial_{\xi n}\, g(x|\xi)$$

In this case the first term is the direct free propagation effect which you might say penetrates right through the obstruction as if it were completely absent. The second and third terms handle the effects of the boundary, which includes the boundary of the obstruction. Reminder: for x at some point in the interior of the white region, $\partial_{\xi n} g(x|\xi)$ *cannot* be interpreted as a charge density, it is just the Poisson Kernel. However, in the form (*), if we take x→s on σ, then $g(x|\xi) \to g(s|\xi) = 0$ inside the first integral, because for a point charge at ξ, we must have $g(x|\xi) = 0$ when x is on the boundary. So for x→s on σ, the first term in (*) vanishes, and I claim that $\partial_{\xi n} g(x|\xi) \to -\delta(s-\xi)$ in a 2D surface sense, and then that term gives just f(s). Thus we get $u_I(s) = f(s)$ which is what must be true.

Note added later: So *when can* you interpret $\partial_{\xi n} g(x|\xi)$ as a charge density on the boundary? I failed to answer this question which was implied by the previous paragraph. The answer is that $\partial_{\xi n} g(x|\xi)$ is the surface charge density for Problem II, the Green's problem. That is so because the potential is $\varphi = g(x|\xi)$ in that case, and we know that $\partial_n \varphi$ is the surface charge, give or take a constant. So $\partial_{\xi n} g(x|\xi)$ is the induced surface charge for Problem II, but for Problem I it is just the Poisson kernel and has no connection with the induced surface charge. [correct]

It's not like there is some kind of wave and we can be in its shadow. The position of x in the white area is never in some kind of shadow.

Comment added: The propagator = solution = $u_{II} = g(x|\xi_1)$ has no knowledge of the interior state of the gray areas shown in the figure. As far as it is concerned, the two inner black circles represent ultra-thin grounded shells of metal which maintain V = 0, and the interior gray areas are the same material as the white area. The purpose then of the ultra-thin metal shells is to carry the induced charge and allow it to equilibrate. Here is then an equivalent geometry

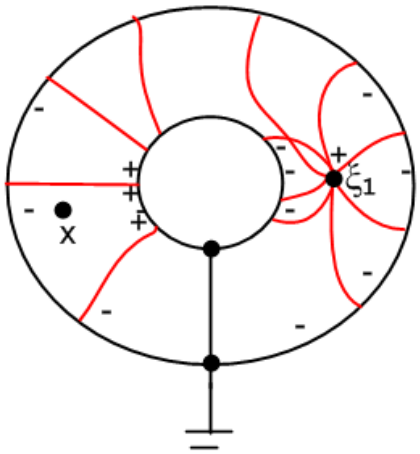

The only thing that matters in Poisson World is where the charges are (including induced). There is no sense of anything blocking the effect of a charge on the potential at some point.

(b) Second form of the Solution

In my Ch 6 Stak meta meta notes page 15, I write the two Problem solutions this way:

$$u_{I}(x) = \int_{R} d\xi\, g(x|\xi)\, q(\xi) - \int_{\sigma} dS_{\xi}\, f(\xi)\, \partial_{\xi n}\, g(x|\xi) \qquad \text{// Dirichlet problem}$$

$$u_{II}(x) = g(x|\xi) \qquad \text{// Green's problem}$$

My notes claim we can write this last Green's problem solution in a different way (I have changed the 2nd term sign, it might be related to which arg of g you diff with respect to)

$$u_{II}(y) = E(y|x) - \int_{\sigma} dS_{\xi}\ \partial_{\xi n} g(x|\xi)\, E(\xi|y)$$

or

$$u_{II}(x) = E(x|\xi_1) + \int_{\sigma} dS_{\xi}\, [\, - \partial_{\xi n} g(\xi_1|\xi)\,]\ E(\xi|x)$$

where $E = g_{free}$. We know from the added comment above that $- \partial_{\xi n} g(\xi_1|\xi)$ is the induced surface charge for problem II. Then the second term is just Coulomb's law for all the induced charge. So this solution really says

$$u_{II}(x) = E(x|\xi_1) + \int_{\sigma} dS_{\xi}\, n(\xi)\, E(\xi|x)$$

Now we ask our same question about the obstruction in Fig 1.

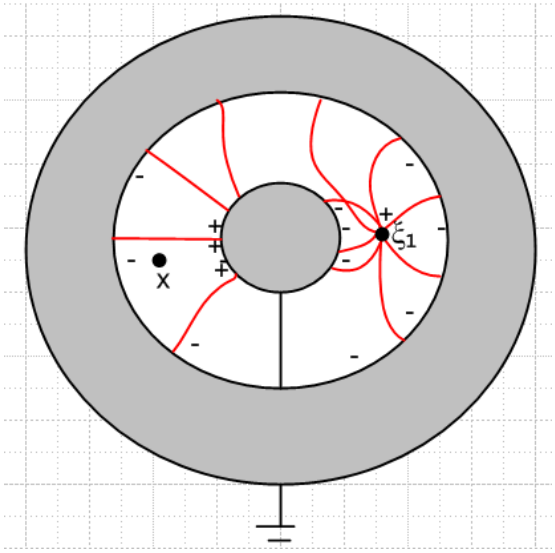

We have a point charge at ξ_1 and x is not line of sight with ξ_1. Nevertheless, term $E(x|\xi_1)$ goes right through the obstruction, and the second surface integral makes all the correction, and again it does not matter one iota whether x is line of sight or not! There is no shadow issue here. The $E(x|\xi_1)$ propagator goes through anything. We have in effect replaced the inner conductor metal with a set of surface charges

glued into 3D space with V=0. If x is in the white region, all that matters are the charges. The E propagator from some distant charge passes through a surface charge layer.

I guess I am now pretty convinced of this fact. You can replace the solid metal central sphere with a thin spherical shell of metal with nothing inside, the potential just goes right through it. (A potential is continuous through a metal surface, by the way) I was wondering about this issue in the context of a transmission line where a surface charge might not be visible to a point between two fat conductors. I am not sure whether or not this is a stupid question.

3. The Problem where Fig 1 is a conducting cylindrical capacitor

Now suppose the above picture was the cross section of an infinite coax cable which is here being treated as a capacitor where the white is a conductive dielectric of σ and ε. This is a different problem in that now we make the inner conductor be at +V/2 and the outer at -V/2 potentials, and there are *no charges inside* which means q(x) = 0 We can still define the same Green's function, albeit in cylindrical coordinates. And there is some final solution u_I. We still have a Green's Problem with g = 0 on both boundary pieces, then our no-charge problem solution is going to be this

$$u_I(x) = - \left[V/2 \int_\sigma dS_{\xi inner}\, \partial_{\xi n} g(x|\xi) - V/2 \int_\sigma dS_{\xi outer}\, \partial_{\xi n} g(x|\xi) \right]$$

$$= V/2 \left[\int_\sigma dS_{\xi outer}\, \partial_{\xi n} g(x|\xi) - \int_\sigma dS_{\xi inner}\, \partial_{\xi n} g(x|\xi) \right]$$

Let x_i be on inner and x_o on outer, so then

$$u_I(x_i) = V/2 \left[\int_\sigma dS_{\xi outer}\, \partial_{\xi n} g(x_i|\xi) - \int_\sigma dS_{\xi inner}\, \partial_{\xi n} g(x_i|\xi) \right]$$

$$u_I(x_o) = V/2 \left[\int_\sigma dS_{\xi outer}\, \partial_{\xi n} g(x_o|\xi) - \int_\sigma dS_{\xi inner}\, \partial_{\xi n} g(x_o|\xi) \right]$$

Now I claim that $\partial_{\xi n} g(x_i|\xi) = -\delta(x_i - \xi)$ if x_i lies on boundary σ (and ξ is also of course on σ). But in the first line, there can be no delta hit on the first term since cannot have $x_i = \xi$ for any ξ on the outer σ. thus we really get here

$$u_I(x_i) = V/2 \left[\; 0 \; - (-1) \right] = V/2$$
$$u_I(x_o) = V/2 \left[-1 - 0 \right] = - V/2$$

which is the expected result. Just testing here.

So how do you compute capacitance in this situation? Well, for conductor shapes I do know the exact solution to the problem, which is this

$$u_I(x) = V/2 \left[\int_\sigma dS_{\xi outer}\, \partial_{\xi n} g(x|\xi) - \int_\sigma dS_{\xi inner}\, \partial_{\xi n} g(x|\xi) \right]$$

The surface charge density is then $n(\xi)/\varepsilon = -\partial_n u_I(x)|^{x=\xi}$ which you can calculate, and then you integrate $n(\xi)$ over say the inner surface to get Q. Then Q = CV so C = C/V.

4. Boundary conditions on E and B at boundary between two conducting dielectrics

[repairs were made to this section 10.29.13, but the resulting 4 King BC's survived intact!]

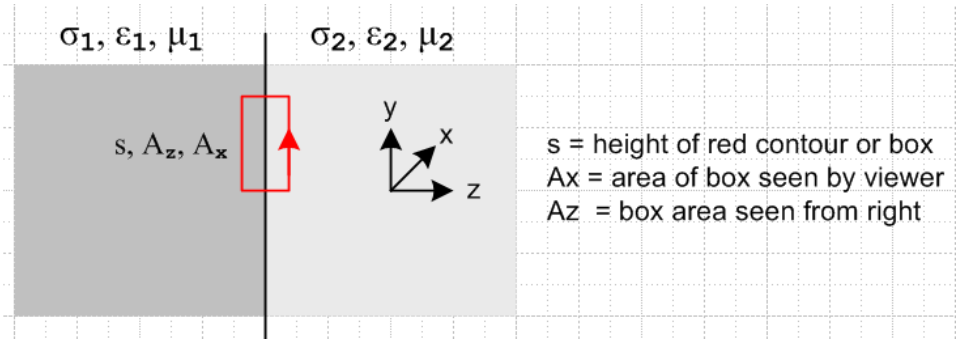

Our Gaussian Box *Total* Continuity says this: $\sigma_1, \varepsilon_1, \mu_1$ $\sigma_2, \varepsilon_2, \mu_2$

$$\text{div } \mathbf{J}_{tot} = -\partial_t \rho_{tot} \quad \Leftrightarrow \quad -\partial_t[\int_V \rho_{tot}\, dV] = \int_S \mathbf{J}_{tot} \bullet d\mathbf{A}$$

$$-j\omega\, n_{tot} = J_{tot,2} - J_{tot,1} \qquad (1.1.16)$$

But we know that $J_{tot} = J_c + J_d = \sigma E + j\omega\varepsilon E = j\omega\xi E$.

As I show just below, the above "continuity equation" with the J_{tot} shown is valid with $\rho_{tot} = 0$! So be careful with this!!

These are the two correct continuity equations: [see new equations of continuity doc]

$$\text{div } \mathbf{J}_c = -\partial_t \rho_{free}$$

$$\text{div } \mathbf{J}_p = -\partial_t \rho_{pol} \qquad \mathbf{J}_p = \partial_t \mathbf{P}$$

There is no continuity equation involving $J_c + J_d$. *However*, this is valid

$$\text{div } \mathbf{D} = \rho_{free}$$

and from this we get

$$\text{div } \partial_t \mathbf{D} = \partial_t \rho_{free}$$

or

$$\text{div } \mathbf{J}_d = \partial_t \rho_{free}$$

Then you could combine to get this "equation of continuity" for the sum $\mathbf{J_c} + \mathbf{J_d}$

$$\text{div}(\mathbf{J_c} + \mathbf{J_d}) = -\partial_t \rho_{free} + -\partial_t \rho_{free} = 0$$

This is a good thing, since curl H = $J_c + J_d$ and we know div curl H = 0. Once again

$$\text{div}(\mathbf{J_c} + \mathbf{J_d}) = 0$$

so that is what I mean when I say there is no continuity equation for this sum of currents in terms of some non-vanishing charges on the right.

Thus we have

$$0 = j\omega\xi_2 E_{2z} - j\omega\xi_1 E_{1z} \qquad \text{// now corrected}$$

and this says

$$\xi_2 E_{2z} = \xi_1 E_{1z} \qquad \text{// which is the long-sought King boundary condition !}$$

Meanwhile, our D divergence Gaussian box says this: [here I assume D = εE as usual]

$$\text{div } \mathbf{D} = \rho_{free} \quad \Leftrightarrow \quad \int_V \rho_{free}\, dV = \int_S \mathbf{D} \bullet d\mathbf{A} \qquad (1.1.13)$$

so

$$n_{free} dA = D_{z2} dA - D_{z1} dA \text{ or } \quad n_{free} = D_{z2} - D_{z1} \quad \text{or} \quad n_{free} = \varepsilon_2 E_{z2} - \varepsilon_1 E_{z1}$$

So we end up with these two equations:

$$0 = \xi_2 E_{2z} - \xi_1 E_{1z} \qquad \text{or} \qquad \xi_2 E_{2z} = \xi_1 E_{1z}$$
$$+n_{free} = \varepsilon_2 E_{z2} - \varepsilon_1 E_{z1}$$

[Note: Before I made corrections above, it was HERE that caused me to go off and write my equation of continuity doc, and I think the mysteries are cleaned up!]

Remember that E fields are complex!! If neither side conducts, this reduces to our familiar result

$$\varepsilon_2 E_{z2} = \varepsilon_1 E_{z1}.$$

On the other hand, suppose the 2 side is a very good conductor and the 1 side is pure dielectric. Then

$$\sigma_2/j\omega\, E_{z2} = \varepsilon_1 E_{z1}$$

In this limit, $\sigma_2 \rightarrow \infty$ and $E_{z2} \rightarrow 0$ and the left side has no clearly defined limiting value. But I know in this case that the result is $\varepsilon_1 E_{z1} = n$, the surface charge density.

This is the first time ever that I have obtained this King result!! Let's see if I can confirm the || rule. I can use the rule

$$\text{curl } \mathbf{E} = -\partial_t \mathbf{B} \quad \Leftrightarrow \quad \oint \mathbf{E} \bullet d\mathbf{s} = -\left[\int_S (\partial_t \mathbf{B}) \bullet d\mathbf{A}\right] \qquad (1.1.17)$$

which for our figure then says

$$E_{2y}s - E_{1y}s = -j\omega \int_S \mathbf{B} \bullet d\mathbf{A} \approx -j\omega \{ (A_x/2)B_{2x} + (A_x/2)B_{1x} \} = -j\omega(A_x/2)[B_{2x}+B_{1x}]$$

As the rectangle is shrunk about the boundary, $A_x \rightarrow 0$ and if B_x is finite then RHS = 0. Then

$$E_{2y} = E_{1y}$$

So we end up with these two boundary conditions for E

$$\xi_2 E_{z2} = \xi_1 E_{z1}$$
$$E_{2y} = E_{1y}$$

If the two media are the same, then E_{z2} is continuous across the boundary. Write if you like as

$$\xi_2 E_{n2} = \xi_1 E_{n1}$$
$$E_{||,2} = E_{||,1}$$

What about his B boundary conditions? Let's just to them while we are here. First, with the Gaussian box we have

$$\text{div } \mathbf{B} = 0 \quad \Leftrightarrow \quad \int_S \mathbf{B} \bullet d\mathbf{A} = 0 \qquad \text{S is any closed surface} \qquad (1.1.15)$$

so

$$0 = B_{z1}A - B_{z2}A \quad \Rightarrow \quad B_{z1} = B_{z2} \quad \text{or} \quad B_{n1} = B_{n2}$$

Next we have

$$\text{curl } \mathbf{H} = \partial\mathbf{D}/\partial t + \mathbf{J} \quad \Leftrightarrow \quad \oint \mathbf{H} \bullet d\mathbf{s} = \int_S [\partial_t \mathbf{D}+\mathbf{J}] \bullet d\mathbf{A} \qquad (1.1.18)$$

so

$$H_{2y}s - H_{1y}s = \int_S [j\omega \mathbf{D}+\mathbf{J}] \bullet d\mathbf{A} = [j\omega D_{2x}+J_{2x}] (A_x/2) - [j\omega D_{1x}+J_{1x}] (A_x/2)$$

or

$$(H_{2y} - H_{1y})s = (A_x/2)\{ [j\omega D_{2x}+J_{2x}] - [j\omega D_{1x}+J_{1x}] \}$$

If nothing is infinite at the boundary, then as the rectangle shrinks to be thin vertical height s, the RHS vanishes and we get then

$H_{2y} = H_{1y}$ or $H_{||2} = H_{||1}$ or $(1/\mu_2)\, B_{||2} = (1/\mu_1)\, B_{||1}$

The two magnetic conditions are then

$B_{n1} = B_{n2}$
$(1/\mu_2)\, B_{||2} = (1/\mu_1)\, B_{||1}$

Here then is my summary: [this is the first time ever that I have had ξ appear in a BC !]

$\xi_2 E_{n2} = \xi_1 E_{n1}$
$E_{||,2} = E_{||,1}$
$(1/\mu_2)\, B_{||,2} = (1/\mu_1)\, B_{||,1}$
$B_{n1} = B_{n2}$ // all these survived changes made 10.29.13

Now compare these results to King who uses $\nu = 1/\mu$

$$\xi_1(\hat{n}_1,\mathbf{E}_1) + \xi_2(\hat{n}_2,\mathbf{E}_2) = 0 \qquad (31a)$$
$$[\hat{n}_1,\mathbf{E}_1] + [\hat{n}_2,\mathbf{E}_2] = 0 \qquad (31b)$$
$$\nu_1[\hat{n}_1,\mathbf{B}_1] + \nu_2[\hat{n}_2,\mathbf{B}_2] = 0 \qquad (31c)$$
$$(\hat{n}_1,\mathbf{B}_1) + (\hat{n}_2,\mathbf{B}_2) = 0 \qquad (31d)$$

All my results agree if I assume that for him perhaps $\hat{\mathbf{n}}_2 = \hat{\mathbf{z}}$ and $\hat{\mathbf{n}}_1 = -\hat{\mathbf{z}}$. In King's notation, it must be that

$(\hat{\mathbf{n}},\mathbf{F}) = \hat{\mathbf{n}} \bullet \mathbf{F} = F_n$ $\hat{\mathbf{n}}$ = normal pointing out of region

$[\hat{\mathbf{n}},\mathbf{F}] = \mathbf{F} - \hat{\mathbf{n}} \bullet \mathbf{F} = \mathbf{F} - F_n\ \hat{\mathbf{n}}$ or something like this

The second is not quite right because of his sign, but OK.

Comment: Note that I maintain $\mathbf{D} = \varepsilon\mathbf{E}$ and $\mathbf{H} = \mu\mathbf{B}$ and sure, both ε and μ could be complex.

Comment: Recalling Jackson's analysis, he argues that the σ conductivity effect is already built into $\varepsilon(\omega)$ at $\omega = 0$. But I am trying to treat ε as a constant of ω, so I will regard my ε as having this effect subtracted out.