Chapter 5 rewrite #3 PhL 1.8.14

This is isntalled

Chapter 5: The Transverse Problem 1
5.1 Separation of φ 1
5.2 Separation of A_z 3
5.3 Development of the Transverse Problem 5
(a) $k_\varphi = k_A$ and the transverse equations 5
(b) The scaling boundary condition on $\varphi_t(x)$ 7
5.4 The "low-loss" approximation 9
(a) Transverse Equations for a Low-Loss transmission line 9
(b) The scaling boundary condition (5.3.11) Revisited 10
5.5 The Capacitor Problem 11
5.6 What happens if low-loss is not assumed? 17

Chapter 5: The Transverse Problem

In this Chapter we define a certain "transverse" potential theory problem and a prescription for the solution of that problem to obtain K and the transmission line parameters C, G and L_e.

In this chapter μ, ε, ξ, β, σ are all parameters of the dielectric.

5.1 Separation of φ

Let $\varphi \equiv \varphi_{12}(\mathbf{x})$ of Section 4.2. Then in the transmission line limit we found

$$\varphi(\mathbf{x}) = \frac{1}{4\pi\xi}\, q(z) \int_{-\infty}^{\infty} dz' \{ \int_{C_1} dx_1'\, dy_1'\, \alpha_1(x_1',y_1') \frac{1}{R_1} - \int_{C_2} dx_2'\, dy_2'\, \alpha_2(x_2',y_2') \frac{1}{R_2} \} . \qquad (4.3.10)$$

Rewrite the above equation as,

$$\varphi(x,y,z) = \frac{1}{4\pi\xi}\, q(z)\, \varphi_t(x,y) \qquad (5.1.1)$$

$$\varphi_t(x,y) = \int_{-\infty}^{\infty} dz' \{ \int_{C_1} dx_1'\, dy_1'\, \alpha_1(x_1',y_1') \frac{1}{R_1} - \int_{C_2} dx_2'\, dy_2'\, \alpha_2(x_2',y_2') \frac{1}{R_2} \} \qquad (5.1.2)$$

where $R_1 = |\mathbf{x} - \mathbf{x}_1'|$, $R_2 = |\mathbf{x} - \mathbf{x}_2'|$, and $\mathbf{x}$ is a point in the dielectric. We thus identify φ_t as a dimensionless "transverse potential" associated with the full potential φ.

Recall that $\mathbf{x}_1$ and $\mathbf{x}_2$ are points on the surfaces of conductors C_1 and C_2 at the same z. Evaluate (5.1.1) at $\mathbf{x}_1$ then at $\mathbf{x}_2$ and then subtract to get the right equation below,

$$V(z) = \varphi(\mathbf{x}_1) - \varphi(\mathbf{x}_2) = \frac{1}{4\pi\xi}\, q(z) \quad [\varphi_t(x_1,y_1) - \varphi_t(x_2,y_2)] \ .$$

The left side is just V(z) according to (4.4.1). Recalling now from (4.4.7) that

$$V(z) = q(z)\,\frac{1}{4\pi\xi}\,K \qquad (4.4.7)$$

we conclude that

$$\varphi_t(x_1,y_1) - \varphi_t(x_2,y_2) = K. \qquad (5.1.3)$$

The Helmholtz equation for φ is given by (1.5.3) for a region including dielectric and conductors,

$$(\nabla^2 + \beta^2)\varphi(x,y,z) = -\,(1/\varepsilon)\,\rho(x,y,z) \qquad (1.5.3) \qquad (5.1.4)$$

where ρ(x,y,z) exists on the boundary of the dielectric region (ie, on the conductor surfaces). Inside the dielectric there is no ρ so we then have

$$(\nabla^2 + \beta^2)\varphi(x,y,z) = 0\ . \qquad \text{// dielectric region} \qquad (5.1.5)$$

Inserting (5.1.1) into (5.1.5) yields,

$$(\nabla^2 + \beta^2)\,\frac{1}{4\pi\xi}\,q(z)\,\varphi_t(x,y) = 0$$

or

$$(\nabla_t^2 + \partial_z^2 + \beta^2)\,\frac{1}{4\pi\xi}\,q(z)\,\varphi_t(x,y) = 0 \qquad // \ \nabla_t^2 = \nabla_{2D}^2 = \nabla^2 - \partial_z^2$$

or

$$\nabla_t^2\varphi_t(x,y)\,q(z) + \varphi_t(x,y)\,\partial_z^2 q(z) + \beta^2\,\varphi_t(x,y)\,q(z) = 0\ .$$

Divide through by $\varphi_t(x,y)\,q(z)$ to get

$$\frac{\nabla_t^2\varphi_t(x,y)}{\varphi_t(x,y)} + \frac{\partial_z^2\,q(z)}{q(z)} + \beta^2 = 0$$

or

$$\left[\frac{\nabla_t^2\varphi_t(x,y)}{\varphi_t(x,y)}\right] + \frac{\partial_z^2\,q(z)}{q(z)} = -\,\beta^2 \qquad (5.1.6)$$

which has the general form,

$$[\,h(x,y)\,] + g(z) = -\,\beta^2\ .$$

The only way this can be true for all x,y,z in a region is if g(z) = some constant, which call $-\,k_\varphi^2$. Then,

$$\frac{\partial_z^2\,q(z)}{q(z)} = -\,k_\varphi^2 \qquad \frac{\nabla_t^2\varphi_t(x,y)}{\varphi_t(x,y)} = -\,\beta^2 + k_\varphi^2\ . \qquad (5.1.7)$$

We can rewrite these equations as

$$[\,\nabla_t^2 + (\beta^2 - k_\varphi^2)]\,\varphi_t(x,y) = 0 \tag{5.1.8}$$

$$[\,\partial_z^2 + k_\varphi^2]\,q(z) = 0\ . \tag{5.1.9}$$

According to (3.8.10) and (5.1.1), for a particular z value, we expect $\varphi_t(x,y)$ to have some constant value K_1 on the entire perimeter of a cross section of conductor C_1, and some other constant value K_2 on the entire perimeter of a cross section of conductor C_2, These facts act as boundary conditions for (5.1.7).

$$\varphi_t(C_1) = K_1 \qquad \varphi_t(C_2) = K_2 \qquad K_1 - K_2 = K \tag{5.1.10}$$

so that (5.1.3) is realized.

The second equation (5.1.9) has the following solution

$$q(z) = q(0)\, e^{-jk_\varphi z} \qquad \Rightarrow \qquad q(z,t) = q(0)\, e^{j(\omega t - k_\varphi z)} \tag{5.1.11}$$

and we find that q(z) has the form of a wave traveling down the transmission line with wavenumber k_φ.

The reader of Chapter 2 or of Appendix D will recognize this as the form assumed for the electric field in (2.1.1) or (D.1.1) where it was assumed as an ansatz without much *a priori* justification. For example,

$$\mathbf{E}(r,\varphi,z,t) = e^{j(\omega t - \beta_d z)}\, \mathbf{E}(r,\varphi)\ . \tag{D.1.1}$$

where β_d of Appendix D is the dielectric β in our current context. When the dust settles below, for a low-loss transmission line we shall in fact end up with $k_\varphi = \beta$ so that (D.1.1) will have the same traveling wave form as (5.1.11).

5.2 Separation of A_z

Let $A_z \equiv A_{z12}(\mathbf{x})$ of Section 4.9. Then in the transmission line limit we found

$$A_z(\mathbf{x}) = \frac{\mu}{4\pi}\, i(z) \int_{-\infty}^{\infty} dz' \{ \int_{C_1} dx_1'\, dy_1'\, b_1(x_1',y_1') \frac{1}{R_1} - \int_{C_2} dx_2'\, dy_2'\, b_2(x_2',y_2') \frac{1}{R_2} \}\ . \tag{4.9.1}$$

Rewrite the above equation as,

$$A_z(x,y,z) = \frac{\mu}{4\pi}\, i(z)\, A_{zt}(x,y) \tag{5.2.1}$$

$$A_{zt}(x,y) = \int_{-\infty}^{\infty} dz' \{ \int_{C_1} dx_1'\, dy_1'\, b_1(x_1',y_1') \frac{1}{R_1} - \int_{C_2} dx_2'\, dy_2'\, b_2(x_2',y_2') \frac{1}{R_2} \} \tag{5.2.2}$$

where $R_1 = |\mathbf{x} - \mathbf{x}_1'|$, $R_2 = |\mathbf{x} - \mathbf{x}_2'|$, and $\mathbf{x}$ is a point in the dielectric. We thus identify A_{zt} as a dimensionless "transverse vector potential" associated with the full vector potential A_z.

Recall that $\mathbf{x}_1$ and $\mathbf{x}_2$ are points on the surfaces of conductors C_1 and C_2 at the same z. Evaluate (5.2.1) at $\mathbf{x}_1$ then at $\mathbf{x}_2$ and then subtract to get the right equation below,

$$W(z) = A_z(\mathbf{x}_1) - A_z(\mathbf{x}_2) = \frac{\mu}{4\pi}\, i(z)\, [A_{zt}(x_1,y_1) - A_{zt}(x_2,y_2)] \ .$$

The left side is just W(z) according to (4.10.1). Recalling now

$$L_e = \frac{W(z)}{i(z)} = \frac{\mu}{4\pi}\, K_L \qquad \Rightarrow \qquad W(z) = \frac{\mu}{4\pi}\, i(z)\, K_L \tag{4.10.8}$$

we conclude that

$$A_{zt}(x_1,y_1) - A_{zt}(x_2,y_2) = K_L.$$

But (4.11.26) says $K_L = K$, so we write this last as

$$A_{zt}(\mathbf{x}_{1t}) - A_{zt}(\mathbf{x}_{2t}) = K \ . \tag{5.2.3}$$

The Helmholtz equation for A_z is given by (1.5.4) for a region including dielectric and conductors,

$$(\nabla^2 + \beta^2)A_z(x,y,z) = -\sum_{i=2}^{N} \mu_i \mathbf{J}_i \quad . \qquad \textit{(1.5.4)} \tag{5.2.4}$$

These $\mathbf{J}_i$ are currents inside the conductors. Although there is small conduction current in the dielectric, it has been absorbed into β^2 as shown in (1.3.21) in the time domain with the use of the King gauge. If we take our region of interest to be the dielectric alone, we then have

$$(\nabla^2 + \beta^2)A_z(x,y,z) = 0 \quad . \qquad \text{// dielectric region} \tag{5.2.5}$$

Inserting (5.2.1) into (5.2.5) yields,

$$(\nabla^2 + \beta^2)\, \frac{\mu}{4\pi}\, i(z)\, A_{zt}(x,y) = 0$$

or

$$(\nabla_t^2 + \partial_z^2 + \beta^2)\, \frac{\mu}{4\pi}\, i(z)\, A_{zt}(x,y) = 0$$

or

$$\nabla_t^2 A_{zt}(x,y)\, i(z) + A_{zt}(x,y)\partial_z^2 i(z) + \beta^2\, A_{zt}(x,y)\, i(z) = 0 \ .$$

Now divide through by $A_{zt}(x,y)\, i(z)$ to get

$$\left[\frac{\nabla_t^2 A_{zt}(x,y)}{A_{zt}(x,y)}\right] + \frac{\partial_z^2 i(z)}{i(z)} + \beta^2 = 0 \qquad (5.2.6)$$

which has the general form,

$$[\, h(x,y)\,] + g(z) = -\beta^2 \ .$$

The only way this can be true for all x,y,z in a region is if g(z) = some constant, which call $-k_A^2$. Then,

$$\frac{\partial_z^2 i(z)}{i(z)} = -k_A^2 \qquad \frac{\nabla_t^2 A_{zt}(x,y)}{A_{zt}(x,y)} = -\beta^2 + k_A^2 \ . \qquad (5.2.7)$$

We can rewrite these equations as

$$[\, \nabla_t^2 + (\beta^2 - k_A^2)]\, A_{zt}(x,y) = 0 \qquad (5.2.8)$$

$$[\, \partial_z^2 + k_A^2]\, i(z) = 0 \ . \qquad (5.2.9)$$

According to (3.8.11) and (5.2.1), for a particular z value, we expect $A_{zt}(x,y)$ to have some constant value W_1 on the entire perimeter of a cross section of conductor C_1, and some other constant value W_2 on the entire perimeter of a cross section of conductor C_2, These facts act as boundary conditions for (5.1.7). Since a potential has an arbitrary zero, we shall set

$$A_{zt}(C_1) = W_1 \qquad A_{zt}(C_2) = W_2 \qquad W_1 - W_2 = K \qquad (5.2.10)$$

so that (5.2.3) is realized.

The second equation (5.2.9) has the following solution

$$i(z) = i(0)\, e^{-jk_A z} \qquad \Rightarrow \qquad i(z,t) = i(0)\, e^{j(\omega t - k_A z)} \qquad (5.2.11)$$

and we find that i(z) has the form of a wave traveling down the transmission line with wavenumber k_A.

Comparing (5.2.11) with (5.1.11), it would certainly seem odd if q(z) and i(z) had the form of traveling waves with different wavenumbers $k_\varphi \neq k_A$. We will formally show in the next section that $k_\varphi = k_A$.

5.3 Development of the Transverse Problem

(a) $k_\varphi = k_A$ and the transverse equations

The longitudinal equations from the previous two sections are these:

$$[\, \partial_z^2 + k_\varphi^2\,]\, q(z) = 0 \qquad \textit{(5.1.8)}$$
$$[\, \partial_z^2 + k_A^2\,]\, i(z) = 0 \ . \qquad \textit{(5.2.8)}$$

But,

$$\varphi(x,y,z) = \frac{1}{4\pi\xi}\ q(z)\ \varphi_{\mathbf{t}}(x,y) \qquad (5.1.1)$$

$$A_{\mathbf{z}}(x,y,z) = \frac{\mu}{4\pi}\ i(z)\ A_{\mathbf{zt}}(x,y)\ . \qquad (5.2.1)$$

Therefore,

$$[\ \partial_{\mathbf{z}}^2 + k_{\varphi}^2\ ]\ \varphi(x,y,z) = 0$$
$$[\ \partial_{\mathbf{z}}^2 + k_{\mathbf{A}}^2\ ]\ A_{\mathbf{z}}(x,y,z) = 0\ . \qquad (5.3.1)$$

Recall that $\mathbf{x_1}$ and $\mathbf{x_2}$ are points on the surfaces of conductors C_1 and C_2. If we write equations (5.3.1) first at $\mathbf{x_1}$ and then at $\mathbf{x_2}$ and then subtract, we get longitudinal equations for V(z) and W(z),

$$[\ \partial_{\mathbf{z}}^2 + k_{\varphi}^2\ ]\ V(z) = 0 \qquad // \ V(z) = \varphi(\mathbf{x_1}) - \varphi(\mathbf{x_2})$$
$$[\ \partial_{\mathbf{z}}^2 + k_{\mathbf{A}}^2\ ]\ W(z) = 0 \qquad // \ W(z) = A_{\mathbf{z}}(\mathbf{x_1}) - A_{\mathbf{z}}(\mathbf{x_2}) \qquad (5.3.2)$$

where we have used the definitions V(z) and W(z) from (4.4.1) and (4.10.1). Recall now the transmission line equations (4.11.11),

$$\partial_{\mathbf{z}} V(z) = -\ \mathbf{z}\ i(z) \qquad \partial_{\mathbf{z}} i(z) = -\ \mathbf{y} V(z)\ . \qquad (4.11.11)$$

Apply $\partial_{\mathbf{z}}$ to each equation and move the right side to the left side,

$$\partial_{\mathbf{z}}^2 V(z) + \mathbf{z}\ \partial_{\mathbf{z}}\ i(z) = 0 \qquad \partial_{\mathbf{z}}^2 i(z) + \mathbf{y}\ \partial_{\mathbf{z}} V(z) = 0\ .$$

Now reuse (4.11.11) to replace $\partial_{\mathbf{z}}\ i(z) = -\ \mathbf{y} V(z)$ and $\partial_{\mathbf{z}} V(z) = -\ \mathbf{z}\ i(z)$

$$[\partial_{\mathbf{z}}^2 - \mathbf{zy}\ ] V(z) = 0 \qquad [\partial_{\mathbf{z}}^2 - \mathbf{zy}\ ]\ i(z) = 0\ .$$

Finally, use (4.10.8) to replace $i(z) = W(z)/L_{\mathbf{e}}$ to get,

$$[\partial_{\mathbf{z}}^2 - \mathbf{zy}\ ] V(z) = 0$$
$$[\partial_{\mathbf{z}}^2 - \mathbf{zy}\ ] W(z) = 0\ . \qquad (5.3.3)$$

Comparison of (5.3.3) with (5.3.2) shows that

$$k_{\varphi}^2 = k_{\mathbf{A}}^2 \equiv k^2 = -\mathbf{zy} \qquad (5.3.4)$$

which fulfills the expectation earlier that we should have $k_{\varphi} = k_{\mathbf{A}}$.

Recall from (4.11.30) that

$$\mathbf{z} = Z_s + j\omega L_e = Z_s + j\omega \frac{\mu}{4\pi} K \qquad Z_s \equiv Z_{s1} + Z_{s2}$$

$$\mathbf{y} = j\omega C' = j\omega\, 4\pi\xi/K \tag{5.3.5}$$

so

$$k^2 = -\mathbf{zy} = -[Z_s + j\omega \frac{\mu}{4\pi} K]\, j\omega\, 4\pi\xi/K$$

$$= -Z_s\, j\omega\, 4\pi\xi/K + \omega^2\mu\xi$$

$$= -\, j\omega\, Z_s\, 4\pi\xi/K + \beta^2 . \qquad \text{// see (1.5.1) for } \beta^2 \tag{5.3.6}$$

Therefore

$$(\beta^2 - k^2) = j\omega\, Z_s\, 4\pi\xi / K = \frac{j\omega\, Z_s\, 4\pi\xi}{K} . \tag{5.3.7}$$

The transverse equations (5.1.7) and (5.2.7) and boundary conditions (5.1.10) and (5.2.10) may now be summarized:

$$[\nabla_t^2 + (\beta^2 - k^2)]\, \varphi_t(x,y) = 0 \qquad \varphi_t(C_1) = K_1 \quad \varphi_t(C_2) = K_2 \quad K_1 - K_2 = K \tag{5.3.8}$$

$$[\nabla_t^2 + (\beta^2 - k^2)]\, A_{zt}(x,y) = 0 \qquad A_{zt}(C_1) = W_1 \quad A_{zt}(C_2) = W_2 \quad W_1 - W_2 = K \tag{5.3.9}$$

where $(\beta^2 - k^2) = \frac{j\omega\, Z_s\, 4\pi\xi}{K}$.

(b) The scaling boundary condition on $\varphi_t(x)$

There exists another boundary condition on φ_t in the case that the dielectric extends transversely to infinity. Recall (5.1.2) for $\varphi_t(x,y) = \varphi_t(\mathbf{x})$,

$$\varphi_t(\mathbf{x}) = \int_{-\infty}^{\infty} dz' \{ \int_{C_1} dx_1' dy_1' \alpha_1(x_1',y_1') \frac{1}{R_1} - \int_{C_2} dx_2' dy_2' \alpha_2(x_2',y_2') \frac{1}{R_2} \} \tag{5.1.2}$$

$$R_1^2 = (x-x_1')^2 + (y-y_1')^2 + (z-z')^2 = s_1^2 + (z-z')^2 \qquad s_1^2 = (x-x_1')^2 + (y-y_1')^2 \tag{4.2.1}$$

$$R_2^2 = (x-x_2')^2 + (y-y_2')^2 + (z-z')^2 = s_2^2 + (z-z')^2 \qquad s_2^2 = (x-x_2')^2 + (y-y_2') .$$

If we take the point **x** transversely far away from the conductors, the following drawing shows the distances R_1 and R_2 which appear in the above integration,

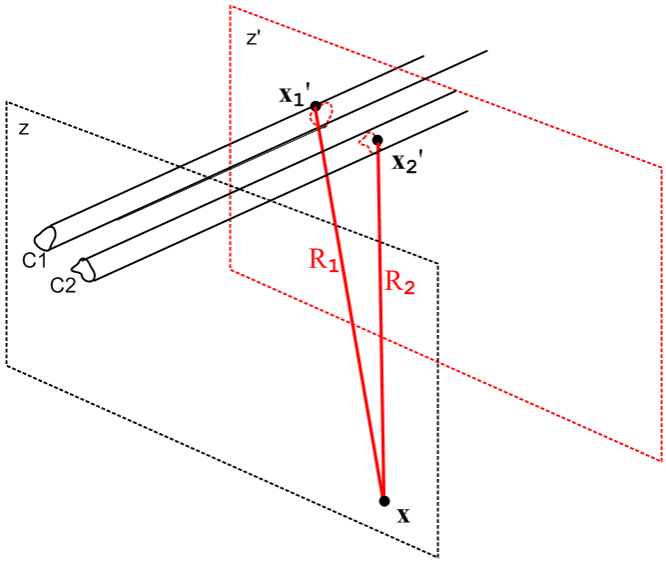

Fig 5.1

During the transverse integration $\int_{C_1} dx_1'\, dy_1'$, distance R_1 does not vary much and can be replaced with a distance from **x** to the "center" of conductor C_1 without changing the integral significantly. The same can be said for R_2. We shall refer to these "center points" as $\mathbf{x}_1$ and $\mathbf{x}_2$. In this case, we obtain

$$\varphi_t(\mathbf{x}) \approx \int_{-\infty}^{\infty} dz' \left\{ \frac{1}{R_1} \int_{C_1} dx_1'\, dy_1'\, \alpha_1(x_1',y_1') - \frac{1}{R_2} \int_{C_2} dx_2'\, dy_2'\, \alpha_2(x_2',y_2') \right\}$$

$$= \int_{-\infty}^{\infty} dz' \left\{ \frac{1}{R_1} - \frac{1}{R_2} \right\} = \int_{-\infty}^{\infty} dz' \left(\frac{1}{\sqrt{s_1^2 + (z-z')^2}} - \frac{1}{\sqrt{s_2^2 + (z-z')^2}} \right) \qquad (5.3.10)$$

where we have used the fact (4.1.3) that the transverse charge densities are normalized to unity. The dz' integral was done in (4.4.5) and equals $\ln(s_2^2/s_1^2)$, so then

$$\varphi_t(\mathbf{x}) \approx \ln(s_2^2/s_1^2) \quad \text{// limiting form as point } \mathbf{x} = (x,y) \text{ moves far from the conductors} \qquad (5.3.11)$$

$$s_1^2 = (x-x_1)^2 + (y-y_1)^2$$
$$s_2^2 = (x-x_2)^2 + (y-y_2)^2 .$$

Whatever the exact solution $\varphi_t(\mathbf{x})$ might be, in the limit discussed above one must obtain $\varphi_t(\mathbf{x}) \approx \ln(s_2^2/s_1^2)$. Of course as one continues to move **x** away to infinity, $s_1 \approx s_2$ and then $\varphi_t(\mathbf{x}) \approx \ln(1) = 0$. Basically (5.3.11) is a boundary condition on the "scale" of the solution $\varphi_t(\mathbf{x})$. If someone were to propose a possible solution $\varphi_t(\mathbf{x}) = 2.6 \ln(s_2^2/s_1^2)$ for some conductor geometry, we could instantly rule out that solution since it violates the boundary condition (5.3.11). The scale of φ_t is restricted in this manner because the charge distributions α_i appearing in (5.3.10) are normalized to unity.

By the exact same argument presented above, we have

$A_{zt}(\mathbf{x}) \approx \ln(s_2^2/s_1^2)$ // limiting form as point $\mathbf{x} = (x,y)$ moves far from the conductors (5.3.12)

We shall give an interpretation of these limiting forms in Section 5.4 (b) below.

5.4 The "low-loss" approximation

(a) Transverse Equations for a Low-Loss transmission line

In this approximation, we take the conductor surface impedance $Z_s \approx 0$. Recall from (5.3.6) that

$$k^2 = \beta^2 - j\omega Z_s 4\pi\xi/K \qquad (5.3.6)$$

Our definition of a "low-loss" transmission line is one for which $k^2 \approx \beta^2$ and in this case the longitudinal wave number k as shown in (5.1.11) and (5.2.11) is $k = \beta$ which is the just the β value of the dielectric. So our low-loss condition is (using (1.5.1) for β^2),

$$|j\omega Z_s 4\pi\xi/K| << |\beta^2|$$

or

$$|Z_s| << (1/4\pi)\,|\beta^2/(\omega\xi)|\ K = (1/4\pi)\,\omega\,|\beta^2/(\omega^2\xi)|\ K = (1/4\pi)\,\omega\mu\,K\,. \qquad (5.4.1)$$

For a symmetric-environment round wire of radius a we found in (2.4.12) that for large ω,

$$Z_s \approx \frac{1}{\sigma(2\pi a)\delta}(1+j) \qquad \text{for } \delta << 16a \qquad \delta^2 = 2/\omega\mu\sigma \qquad (2.4.16)$$

Our low-loss condition is then

$$\frac{1}{\sigma(2\pi a)\delta}\sqrt{2} << \omega\mu\,(K/4\pi)$$

or

$$\frac{1}{(2\pi a)\delta}\sqrt{2} << \omega\mu\sigma\,(K/4\pi) = (2/\delta^2)\,(K/4\pi)$$

or

$$(\delta/a) << K/\sqrt{2}\ . \qquad (5.4.2)$$

We saw in the Example of Section 4.6 that $K = 2\ln(a_2/a_1)$ for a coaxial cable. Even for a very large radius ratio of 100 this would be $K = 2\ln(100) = 9.2$. for a more typical ratio of perhaps 5, $K \approx 3.2$. Then our inequality above says roughly

$$(\delta/a) << 2$$

which is then our ball-park estimate for applicability of the "low-loss transmission line" condition. We showed in Section 2.5 how Z_s can be modified for some other geometry.

If we assume this low-loss limit is in effect, then

$\beta^2 - k^2 = j\omega Z_s 4\pi\xi/K \approx 0$

and our transverse equations (5.3.8) and (5.3.9) become 2D Laplace equations,

$$\nabla_t^2\varphi_t(x,y) = 0 \qquad \varphi_t(C_1) = K_1 \qquad \varphi_t(C_2) = K_2 \qquad K_1 - K_2 = K \tag{5.4.3}$$

$$\nabla_t^2 A_{zt}(x,y) = 0 \qquad A_{zt}(C_1) = W_1 \qquad A_{zt}(C_2) = W_2 \qquad W_1 - W_2 = K \tag{5.4.4}$$

The parallelism between φ_t and A_{zt} should not be surprising in light of Section 1.3 (b) where it was noted that **A** and φ are components of the same relativistic 4-vector.

(b) The scaling boundary condition (5.3.11) Revisited

First, a quick review.

In 3D the potential (SI units) of a point charge q located at $\mathbf{x}_1$ is $\varphi(\mathbf{x}) = (q/4\pi\varepsilon|\mathbf{x}-\mathbf{x}_1|) = q/(4\pi\varepsilon R_1)$.
In 2D the potential of a point charge q located at $\mathbf{x}_1$ is $\varphi(\mathbf{x}) = -(q/2\pi\varepsilon)\ln|\mathbf{x}-\mathbf{x}_1| = -(q/2\pi\varepsilon)\ln s_1$.

The 3D $\varphi(\mathbf{x})$ is the solution of $-\nabla^2(\varphi) = (q/\varepsilon)\delta^{(3)}(\mathbf{x}-\mathbf{x}_1)$ as shown in (H.1.4) and as proven in Appendix H. The quantity $1/4\pi R_1$ is the 3D free-space propagator of the 3D Laplace equation. It is the Green's function of the equation $-\nabla^2 g(\mathbf{x}|\mathbf{x}_1) = \delta^{(3)}(\mathbf{x}-\mathbf{x}_1)$.

The 2D $\varphi(\mathbf{x})$ is the solution of $-\nabla^2_{2D}(\varphi) = (q/\varepsilon)\delta^{(2)}(\mathbf{x}-\mathbf{x}_1)$ as shown in (I.1.4) and as proven in Appendix I. The quantity $-2\pi\ln s_1$ is the 2D free-space propagator of the 2D Laplace equation. It is the Green's function of the equation $-\nabla^2_{2D} g(\mathbf{x}|\mathbf{x}_1) = \delta^{(2)}(\mathbf{x}-\mathbf{x}_1)$.

With this brief review, we now examine a 2D cross section view of the transmission line of Fig 5.1 at a scale that makes the two conductors appear very small and very close together, and at the same time we imagine more elaborate cross section shapes. The dielectric is assumed non-conducting, so $\xi = \varepsilon$. The three points indicated by the three dots on the right all lie in the plane of paper, this is just a 2D drawing and for example $\mathbf{x} = (x,y)$.

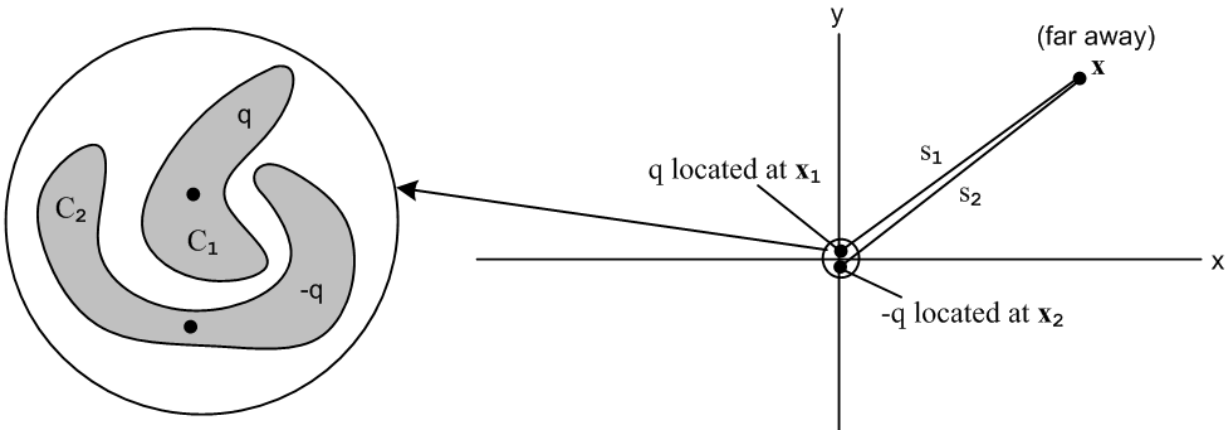

Fig 5.2

The dots on the left indicate the "center of charge" for each conductor and these dots appear also on the right. The claim is that when **x** is very far away, the variation in s_1 as it moves over the perimeter of the conductor C_1 cross section is so small that we can replace s_1 with a distance to the center of charge of C_1 and similarly for R_2. Thus, on the right we end up with the 2D potential of two point charges which form a 2D electric dipole. Using the results just quoted in the above review, we find that

$$\varphi(\mathbf{x}) = \varphi_1(\mathbf{x}) + \varphi_2(\mathbf{x}) = -(q/2\pi\varepsilon)\ln|\mathbf{x}-\mathbf{x}_1| - (-q/2\pi\varepsilon)\ln|\mathbf{x}-\mathbf{x}_2| = -(q/2\pi\varepsilon)\ln s_1 + (q/2\pi\varepsilon)\ln s_2$$

$$= (q/2\pi\varepsilon)\ln(s_2/s_1) = (q/4\pi\varepsilon)\ln(s_2^2/s_1^2) \ .$$

Recalling for $\xi = \varepsilon$ that

$$\varphi(x,y,z) = \frac{1}{4\pi\varepsilon}\ q(z)\ \varphi_t(x,y) \qquad (5.1.1)$$

we find that

$$\varphi_t(x,y) = \ln(s_2^2/s_1^2) \ . \qquad \text{// for } \mathbf{r} \text{ far away}$$

Thus we have an alternate derivation and 2D dipole interpretation of our earlier "scaling boundary condition" (5.3.11).

5.5 The Capacitor Problem

We have now boiled down the computation of transmission line parameters (in the transmission line limit and in the low-loss limit) to the problem of computing the capacitance of a section of transmission line. Here we assume the dielectric is non-conducting so $\xi = \varepsilon$ and we don't have to worry about the distinction between charge densities q_c and q_s as discussed in (4.11.19).

Solving the capacitor problem using φ

A standard approach to a general 2D electrostatics capacitor problem is as follows. Start with

$$\nabla_{2D}^2\varphi(x,y) = 0 \qquad \varphi(C_1) - \varphi(C_2) = V = \text{voltage between conductors} \qquad (5.5.1)$$

where we now (arbitrarily) use notation ∇^2_{2D} in place of ∇^2_t.

Since the dielectric presumably fills the region between the conductors, the dielectric is the official "region" of a Green's function problem. If we put a unit positive point charge at some location (x',y') in the dielectric region we can then formally (!) solve this 2D Green's function problem,

$$-\nabla_{2D}^2 g(x,y|x',y') = \delta(x-x')\delta(y-y') \qquad g(x,y|x',y') = 0 \ \text{ for } (x,y) \text{ on both } C_1 \text{ and } C_2$$
$$g(x,y|x',y') = 0 \ \text{ for } (x,y) = \infty \ \text{ (if appropriate)} \qquad (5.5.2)$$

Here g(x,y|x',y') is specific to our geometry; it is not the 2D free-space Green's function - $\ln(1/R)/2\pi$ shown in (I.1.4). The free-space solution has only the lower boundary condition stated above.

In very general notation, if a region contains some sources $\boldsymbol{q}(\mathbf{x})$ and if the potential φ is *prescribed* on the entire closed boundary surrounding the region by a function f, then the solution to (5.5.1) is given in Stakgold notation as (1.5.11) (which we derive in the lines following (1.5.11) for both Laplace and Helmholtz equations),

$$\varphi(x) = \int_R dx'\, g(x|x')\, \boldsymbol{q}(x') - \int_\sigma dS_\xi\, f(\xi)\, \partial_{\xi n} g(x|\xi) \qquad \text{// Stakgold (6.81) .} \qquad (1.5.11)$$

where σ represents the closed boundary of the region of interest, dS_ξ is an integration over this boundary, and $\partial_{\xi n} g(x|\xi)$ is the derivative of the Green's function in a direction locally normal to the boundary surface. In potential theory, this type of problem is known as "the Dirichlet Problem". In our case the boundary consists of C_1, C_2 and the Great Circle at ∞. Stakgold deals in an arbitrary number of spatial dimensions, but of course we have only 2 dimensions here, so dS_ξ is a line integral around the boundary. A picture is in order, showing a cross section of the transmission line,

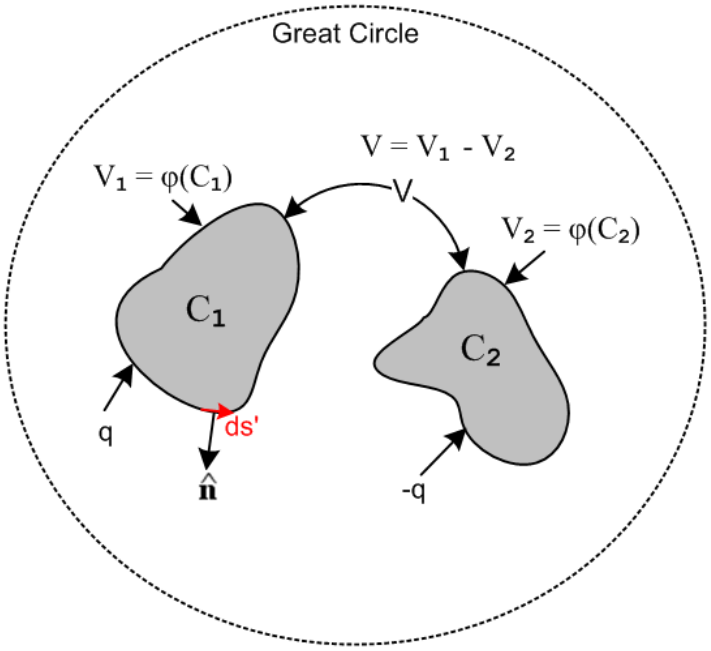

Fig 5.3

We know that on the great circle φ = 0, so there will be no contribution from that part of the Dirichlet boundary. What we do *not* know are V_1 and V_2 which are the constant potentials on C_1 and C_2. If it happened that the picture had mirror symmetry in a plane separating the two conductors, we would know that $V_1 = V/2$ and $V_2 = -V/2$, but in the general case we don't know V_1 and V_2 *a priori*. For the moment, we leave them as to-be-determined quantities.

In our application of (1.5.11) there are no charges $\boldsymbol{q}(x)$ in the dielectric region. We put one there temporarily to obtain the Green's function, but it is now gone. Thus (1.5.11) reads

$$\varphi(x,y) = -\oint_{C1} ds'\, f(C_1)\, \partial_n g(x,y|x',y') - \oint_{C2} ds'\, f(C_2)\, \partial_n g(x,y|x',y') - \oint_{GC} ds'\, f(\infty)\, \partial_n g(x,y|x',y')$$

$$= -\oint_{C1} ds'\, V_1\, \partial_n g(x,y|x',y') - \oint_{C2} ds'\, V_2\, \partial_n g(x,y|x',y') - \oint_{GC} ds'\, (0)\, \partial_n g(x,y|x',y')$$

$$= -V_1 \oint_{C1} ds'\, \partial_n g(x,y|x',y') - V_2 \oint_{C2} ds'\, \partial_n g(x,y|x',y') \}.$$

$$= V_1 F_1(x,y) + V_2 F_2(x,y) \qquad (5.5.3)$$

where the $F_i(x,y)$ are determined by doing the line integrals for a given geometry. If $y = y_1(x)$ describes a piece of the C_1 perimeter, then

$$ds' = \sqrt{dx'^2 + dy'^2} = \sqrt{1 + \partial_{x'} y_1(x')}\; dx' \qquad (5.5.4)$$

which gives a candidate ds' for doing the line integral over that piece of the perimeter.

Once $\varphi(x,y)$ is known, one can compute the normal electric field E_n at the conductor surfaces,

$$\begin{aligned} E_n(\mathbf{x}) &= -\partial_{n1}\varphi(\mathbf{x}) = -V_1\,[\partial_{n1}F_1(\mathbf{x})] - V_2\,[\partial_{n1}F_2(\mathbf{x})] \equiv V_1\,G_{11}(\mathbf{x}) + V_2\,G_{12}(\mathbf{x}) \qquad \mathbf{x} \text{ on } C_1 \\ E_n(\mathbf{x}) &= -\partial_{n2}\varphi(\mathbf{x}) = -V_1\,[\partial_{n2}F_1(\mathbf{x})] - V_2\,[\partial_{n2}F_2(\mathbf{x})] \equiv V_1\,G_{21}(\mathbf{x}) + V_2\,G_{22}(\mathbf{x})\ . \qquad \mathbf{x} \text{ on } C_2 \end{aligned} \qquad (5.5.5)$$

Since the conductors are different, the resulting four functions G_{ij} will in general be different. For example, we are taking normal derivatives of the F_i at different points in space on different (1D) surfaces.

We may now compute the (linear) surface charge density using (11.4.7) assuming $E_n = 0$ inside the conductor,

$$\begin{aligned} n_1(x,y) &= \varepsilon E_n(x,y) = \varepsilon V_1\,G_{11}(\mathbf{x}) + \varepsilon V_2\,G_{12}(\mathbf{x}) \qquad \mathbf{x} \text{ on } C_1 \\ n_2(x,y) &= \varepsilon E_n(x,y) = \varepsilon V_1\,G_{21}(\mathbf{x}) + \varepsilon V_2\,G_{22}(\mathbf{x}) \qquad \mathbf{x} \text{ on } C_2 \end{aligned} \qquad (5.5.6)$$

where ε is of course for the dielectric. One can then integrate over the boundaries of the conductors to get the total charges q_1 and q_2 residing on the conductors,

$$\begin{aligned} q_1 &= \oint_{C1} ds'\, n_1(x',y') = \varepsilon V_1 H_{11} + \varepsilon V_2 H_{22} \\ q_2 &= \oint_{C2} ds'\, n_2(x',y') = \varepsilon V_1 H_{21} + \varepsilon V_2 H_{22} \end{aligned} \qquad (5.5.7)$$

where the H_{ij} are now four constants which we have computed by doing the above process. Since it turns out that $H_{12} = H_{21}$ as shown below, we can ignore H_{21}, $G_{21}(\mathbf{x})$, and $\partial_{n2}F_1(\mathbf{x})$ in the above set of calculations.

We now define some new constants $c_{ij} = \varepsilon H_{ij}$ and write the above as

$$q_1 = c_{11}V_1 + c_{12}V_2$$
$$q_2 = c_{21}V_1 + c_{22}V_2 \ . \qquad (5.5.8)$$

Comment: The coefficients c_{ij} are dimensionally capacitance, but they are a little strange. If we start off with the conductors holding charges q_1 and q'_2 and then we ground C_2 to the great circle (thin wire, $V_2 = 0$), and then we measure V_1 relative to the great circle, we find that $V_1 = q_1/c_{11}$ and $q_2 = c_{21}V_1$. So c_{11} is the capacitance of C_1 *in the presence of* a grounded C_2 (which is not the same as the capacitance of C_1 in isolation). And c_{21} determines how much charge q_2 is "induced" onto C_2 by the presence of charged C_1. Smythe (p 37) and Oughstun (p 23) refer to the c_{ij} both as "coefficients of capacitance" and "coefficients of induction". This should be distinguished from the notion of conductors C_1 and C_2 each having a "self-capacitance" (each in isolation) and having a "mutual capacitance" (to be called C below).

Writing the above pair of equations in matrix notation we get,

$$\begin{pmatrix} q_1 \\ q_2 \end{pmatrix} = \begin{pmatrix} c_{11} & c_{12} \\ c_{21} & c_{22} \end{pmatrix} \begin{pmatrix} V_1 \\ V_2 \end{pmatrix} \qquad \text{or} \qquad \mathbf{q} = c\,\mathbf{V} \ . \qquad (5.5.9)$$

We know all the c_{ij} because we computed them above. Then invert to get

$$\begin{pmatrix} V_1 \\ V_2 \end{pmatrix} = \begin{pmatrix} s_{11} & s_{12} \\ s_{21} & s_{22} \end{pmatrix} \begin{pmatrix} q_1 \\ q_2 \end{pmatrix} \qquad \text{or} \qquad \mathbf{V} = s\mathbf{q} \qquad (5.5.10)$$

where matrix $s = c^{-1}$ is called the "mutual elastance" matrix by Smythe (p 36), and the "coefficients of potential" by Oughstun (p 21). Both authors deal with an arbitrary number of conductors.

The reader will not be surprised to learn that in general $c_{ij} = c_{ji}$ and $s_{ij} = s_{ji}$ so the matrices c and s are in fact symmetric matrices. Smythe shows this on pages 36-37 based on what he calls "Green's Reciprocation Theorem" on page 34 (George Green once again!). This theorem can be a lifesaver in certain electrostatic problems.

Now our problem as shown in Fig 5.3 is to compute the potential φ when C_1 has charge q and C_2 has charge -q. We then finally arrive at the appropriate values of V_1 and V_2 for our problem, which we said above were "to be determined". Here they are:

$$\begin{pmatrix} V_1 \\ V_2 \end{pmatrix} = \begin{pmatrix} s_{11} & s_{12} \\ s_{21} & s_{22} \end{pmatrix} \begin{pmatrix} q \\ -q \end{pmatrix} = q \begin{pmatrix} s_{11} & s_{12} \\ s_{21} & s_{22} \end{pmatrix} \begin{pmatrix} 1 \\ -1 \end{pmatrix} \qquad (5.5.11)$$

so that

$$V_1 = q\,(s_{11} - s_{12})$$
$$V_2 = q\,(s_{21} - s_{22})$$

$$V = V_1 - V_2 = q\,[s_{11} + s_{22} - 2s_{12}] \ . \qquad // \ s_{12} = s_{21} \text{ as noted above} \qquad (5.5.12)$$

Finally, we have computed the (inverse) capacitance of our transmission line section,

$$1/C = V/q = s_{11} + s_{22} - 2s_{12} .$$

But we know how to invert a simple 2x2 matrix (T = transpose, cof = cofactor, det(c) = |c|)

$$s = c^{-1} = \mathrm{cof}(c^{T})/\det(c)$$

so that

$$s = \begin{pmatrix} s_{11} & s_{12} \\ s_{21} & s_{22} \end{pmatrix} = \begin{pmatrix} c_{22} & -c_{12} \\ -c_{21} & c_{11} \end{pmatrix} /\det(c) . \qquad (5.5.13)$$

Then

$$1/C = s_{11} + s_{22} - 2s_{12} = (c_{22} + c_{11} + 2c_{12})/\det(c) = \frac{c_{11} + c_{22} + 2c_{12}}{c_{11}c_{22} - c_{12}^2}$$

and finally

$$C = \frac{c_{11}c_{22} - c_{12}^2}{c_{11} + c_{22} + 2c_{12}} . \qquad (5.5.14)$$

We have found verification of this result on the web from Oughstun page 27,

$$\boxed{C = \frac{c_{11}c_{22} - c_{12}^2}{c_{11} + c_{22} + 2c_{12}}} \qquad (27)$$

for the mutual capacitance of a two conductor system.

Once we have C, we know from (4.11.30) that

$$K = 4\pi\varepsilon/C = 4\pi\varepsilon \frac{c_{11} + c_{22} + 2c_{12}}{c_{11}c_{22} - c_{12}^2} . \qquad (5.5.15)$$

Thus, we have solved "the capacitor problem" to obtain K for the transmission line. The other line parameters are then given as in (4.11.30)

$$G = 4\pi\sigma/K \qquad L_e = \frac{\mu}{4\pi} K .$$

Statement of the capacitor problem in terms of φ_t

To show that our capacitor problem is the same as (5.4.3), we first quote the capacitor problem (5.5.1),

$$\nabla_{2D}^2\varphi(x,y) = 0 \qquad \varphi(C_1) - \varphi(C_2) = V\ . \qquad (5.5.1)$$

Then use (5.1.1) $\varphi(x,y,z) = \frac{q(z)}{4\pi\varepsilon}\ \varphi_t(x,y)$ to get

$$\nabla_{2D}^2\varphi_t(x,y) = 0 \qquad \frac{q(z)}{4\pi\varepsilon}\ \varphi_t(C_1) - \frac{q(z)}{4\pi\varepsilon}\ \varphi_t(C_2) = V$$

or

$$\nabla_{2D}^2\varphi_t(x,y) = 0 \qquad \varphi_t(C_1) - \varphi_t(C_2) = V\,\frac{4\pi\varepsilon}{q(z)}$$

or

$$\nabla_{2D}^2\varphi_t(x,y) = 0 \qquad \varphi_t(C_1) - \varphi_t(C_2) = K$$

which is (5.4.3). In the last step we used (4.4.7) that $V(z) = \frac{q(z)}{4\pi\varepsilon}\ K$. The potentials V_1 and V_2 are related to constants K_1 and K_2 by

$$V_1 = \frac{q(z)}{4\pi\varepsilon}\ K_1 \qquad V_2 = \frac{q(z)}{4\pi\varepsilon}\ K_2 \qquad (5.5.16)$$

Solution of the capacitor problem using φ_t

Here we just repeat the above analysis, showing how things differ. We leave out the words. The main differences are that the V_i are replaced by K_i and the factor $\frac{q(z)}{4\pi\varepsilon}$ appears on the lines where n_i are computed. As before, we now start off with K_1 and K_2 unknown, but we find them in the end:

$$\varphi_t(x,y) = -\oint_{C1} ds'\, K_1\, \partial_n g(x,y|x',y') - \oint_{C2} ds'\, K_2\, \partial_n g(x,y|x',y')$$

$$= K_1 F_1(x,y) + K_2 F_2(x,y)$$

$$E_n(x,y) = -\partial_{n1}\varphi = -\frac{q(z)}{4\pi\varepsilon}\,\partial_{n1}\varphi_t(x,y) = \frac{q(z)}{4\pi\varepsilon}\ \{ K_1 G_{11}(\mathbf{x}) + K_2 G_{12}(\mathbf{x}) \} \qquad \mathbf{x} \text{ on } C_1$$

$$E_n(x,y) = -\partial_{n1}\varphi = -\frac{q(z)}{4\pi\varepsilon}\,\partial_{n2}\varphi_t(x,y) = \frac{q(z)}{4\pi\varepsilon}\ \{K_1 G_{21}(\mathbf{x}) + K_2 G_{22}(\mathbf{x}) \} \qquad \mathbf{x} \text{ on } C_2$$

$$n_1(x,y) = \varepsilon E_n(x,y) = \frac{q(z)}{4\pi\varepsilon}\,\varepsilon K_1 G_{11}(\mathbf{x}) + \frac{q(z)}{4\pi\varepsilon}\,\varepsilon K_2 G_{12}(\mathbf{x}) \qquad \mathbf{x} \text{ on } C_1$$

$$n_2(x,y) = \varepsilon E_n(x,y) = \frac{q(z)}{4\pi\varepsilon}\,\varepsilon K_1 G_{21}(\mathbf{x}) + \frac{q(z)}{4\pi\varepsilon}\,\varepsilon K_2 G_{22}(\mathbf{x}) \qquad \mathbf{x} \text{ on } C_2$$

$$q_1 = \oint_{C1} ds'\, n_1(x',y') = \frac{q(z)}{4\pi\varepsilon}\ [\varepsilon K_1 H_{11} + \varepsilon K_2 H_{22}] = \frac{q(z)}{4\pi\varepsilon}\ [\, c_{11}V_1 + c_{12}V_2\ ]$$

$$q_2 = \oint_{C2} ds'\, n_2(x',y') = \frac{q(z)}{4\pi\varepsilon}\ [\varepsilon K_1 H_{21} + \varepsilon K_2 H_{22}] = \frac{q(z)}{4\pi\varepsilon}\ [\, c_{21}V_1 + c_{22}V_2\ ]$$

$$\begin{pmatrix} q_1 \\ q_2 \end{pmatrix} = \frac{q(z)}{4\pi\varepsilon} \begin{pmatrix} c_{11} & c_{12} \\ c_{21} & c_{22} \end{pmatrix} \begin{pmatrix} K_1 \\ K_2 \end{pmatrix} \qquad \text{or} \qquad \mathbf{q} = \frac{q(z)}{4\pi\varepsilon} c\,\mathbf{K} \quad .$$

$$\begin{pmatrix} K_1 \\ K_2 \end{pmatrix} = \frac{4\pi\varepsilon}{q(z)} \begin{pmatrix} s_{11} & s_{12} \\ s_{21} & s_{22} \end{pmatrix} \begin{pmatrix} q_1 \\ q_2 \end{pmatrix} \qquad \text{or} \qquad \mathbf{K} = \frac{4\pi\varepsilon}{q(z)} s\mathbf{q}$$

$$\begin{pmatrix} K_1 \\ K_2 \end{pmatrix} = \frac{4\pi\varepsilon}{q(z)} \begin{pmatrix} s_{11} & s_{12} \\ s_{21} & s_{22} \end{pmatrix} \begin{pmatrix} q(z) \\ -q(z) \end{pmatrix} = 4\pi\varepsilon \begin{pmatrix} s_{11} & s_{12} \\ s_{21} & s_{22} \end{pmatrix} \begin{pmatrix} 1 \\ -1 \end{pmatrix}$$

$$K_1 = 4\pi\varepsilon\,(s_{11} - s_{12})$$
$$K_2 = 4\pi\varepsilon\,(s_{21} - s_{22})$$

$$K = K_1 - K_2 = 4\pi\varepsilon\,[s_{11} + s_{22} - 2s_{12}]$$

so

$$K = 4\pi\varepsilon \frac{c_{11} + c_{22} + 2c_{12}}{c_{11}c_{22} - c_{12}^2} \qquad (5.5.17)$$

Then the same capacitance shown in (5.5.14) is recovered,

$$C = 4\pi\varepsilon/K = \frac{c_{11}c_{22} - c_{12}^2}{c_{11} + c_{22} + 2c_{12}} .$$

For arbitrary conductor shapes, carrying out the Green's function program just outlined is quite difficult and usually requires expanding the Green's function in some complete set of eigenfunctions and then making various approximations. Our point is that the capacitor problem is a well-posed problem and has a solution value K. Numerical evaluations are also possible.

If the conductors are round, the problem can be solved *exactly* as we shall show in Chapter 6.

5.6 What happens if low-loss is not assumed?

Let's go back to our equation before the low-loss assumption that $Z_s = 0$,

$$[\nabla_t^2 + \frac{j\omega Z_s 4\pi\xi}{K}]\,\varphi_t(x,y) = 0 \qquad \varphi_t(C_1) = K/2 \qquad \varphi_t(C_2) = -K/2 \qquad (5.3.8)$$

This is now a Helmholtz equation with Helmholtz parameter $\frac{j\omega Z_s 4\pi\xi}{K}$, whereas with $Z_s = 0$ we had the simpler Laplace Equation. Treating Z_s as some given value $\neq 0$, we could go ahead and find the Green's function for the above equation and it would be a function of K since K appears in the Helmholtz parameter. Call this Helmholtz Green's function $g_K(x,y|x',y')$. We still have $\varphi = \frac{1}{4\pi\varepsilon}\, q(z)\, \varphi_t$ being the full potential from which the electric field is obtained as $E_n = -\partial_n\varphi$ [recall that transverse **A** components are zero so this is consistent with $\mathbf{E} = -\text{grad}\,\varphi - \partial_t\mathbf{A}$ **].** The solution of the above PDE system then starts off

$$\varphi_t(x,y) = -\oint_{C1} ds'\, K_1\, \partial_n g_K(x,y|x',y') - \oint_{C2} ds'\, K_2\, \partial_n g_K(x,y|x',y')$$

$$= K_1 F_1(x,y,K) + K_2 F_2(x,y,K) \ . \qquad (5.6.1)$$

From this point on, every function and constant acquires and argument K: $G_{ij}(\mathbf{x},K)$, $H_{ij}(K)$ and then $c_{ij}(K)$. We end up then with

$$K = 4\pi\varepsilon \frac{c_{11}(K) + c_{22}(K) + 2c_{12}(K)}{c_{11}(K)c_{22}(K) - [c_{12}(K)]^2} \ . \qquad (5.6.2)$$

The new feature is that K appears on both sides of the last equation. This probably-complicated equation then has to be solved for K, and sometimes this is referred to as "an eigenvalue problem" for K. For example, if Z_s is very small but non-zero, we would expect the solution for K to be slightly different from the value obtained with $Z_s = 0$ and one could perhaps approach the problem using perturbation theory where the Helmholtz parameter is a "smallness parameter".

Recall that

$$k^2 = \beta^2 - j\omega Z_s 4\pi\xi/K \qquad \textit{(5.3.6)}$$

where now K is the "eigenvalue" of our solution above. If Z_s is very small but not zero, we end up then with

$$k = \beta - \Delta$$

where Δ is a small complex number. The longitudinal transmission line behavior of all z-dependent functions like φ, A_{zt}, q, V, W, **E**, **B** is then given by (5.1.11),

$$q(z,t) = q(z,t) = q(0)\, e^{j(\omega t - kz)} = q(0)\, e^{j(\omega t - [\beta - \Delta]z)}$$

$$= q(0)\, e^{j(\omega t - [\beta - Re(\Delta)]z)}\ e^{-Im(\Delta)z}$$

The real part of Δ causes a shift in the wavenumber k so the wave no longer propagates with the normal dielectric wavenumber β. Since $v = \omega/k$, we will find that the wave is "slowed down" due to the drag effect of the non-zero surface impedance of the conductors. The imaginary part of Δ then causes an exponential decay of the wave magnitude due to ohmic losses at the conductor surface. In our Chapter 2 analysis of the round wire we found that in general Z_s is itself complex, so computation of Δ is a somewhat complicated problem which we shall not attempt here.

The problem of lossy transmission lines is usually approached using **E** and **B** fields, rather than potentials φ and A_z, and the analysis is then similar to the way waveguides in general are treated. Due to the skin effect, the **E** and **B** fields penetrate a distance ~δ into the conductor surfaces and this results in ohmic

losses and a "drag" on the propagating wave. In this approach, one ends up again with an eigenvalue problem to solve, not directly for K but for some other related parameter like k.

In the 12-page Section 4.5 of his book, Matick studies a lossy-transmission line in the simplest possible case which is a stripline geometry whose gap S is small compared to the width and whose metal strips are much thicker than the skin depth δ. His parameter γ is related to our parameter k by γ = jk, and his longitudinal direction is x instead of our z. He ends up with a transcendental "eigenvalue equation" (4-66) for γ, but if loss is very small, he can approximately solve for γ with these results

$$\mathrm{Im}(\gamma) = \beta(1+\delta/2S) \qquad \mathrm{Re}(\gamma) = \beta\,(\delta/2S) \qquad \text{// Matick (4-75,76,77)}$$

which with γ = jk we translate to

$$\mathrm{Im}(k) = -\,\mathrm{Re}(\gamma) = -\,\beta\,(\delta/2S)$$
$$\mathrm{Re}(k) = \mathrm{Im}(\gamma) = \beta(1+\delta/2S)$$

$$k = \beta(1+\delta/2S) - j\,\beta\,(\delta/2S) = \beta - [-(\delta/2S) + j(\delta/2S)]$$

so

$$\Delta = -(\delta/2S) + j(\delta/2S)\ .$$

Thus, for such a stripline transmission line, the longitudinal dependence of all functions has this form,

$$q(z,t) = e^{j(\omega t-[\beta-\mathrm{Re}(\Delta)]z)}\ e^{-\mathrm{Im}(\Delta)z}$$

$$= e^{j(\omega t-[\beta+\delta/2S]z)}\ e^{-(\delta/2S)z}$$

which shows the exponential loss factor and an increased wavenumber β+δ/2S which corresponds to a decreased wavelength λ and a decreased wave velocity v = ω/k = ωλ/2π = fλ, the "drag effect".

Matick has an errata in this section which is a bit confusing, so we repair it right here. His equation (4-50) should read

$$\nabla^2\mathbf{E} = \left(\frac{\partial^2 E_x}{\partial x^2} + \frac{\partial^2 E_x}{\partial z^2}\right)\hat{\mathbf{x}} + \left(\frac{\partial^2 E_z}{\partial x^2} + \frac{\partial^2 E_z}{\partial z^2}\right)\hat{\mathbf{z}} = (j\omega\mu\sigma - \omega^2\mu\varepsilon)(E_x\hat{\mathbf{x}} + E_z\hat{\mathbf{z}}) \qquad \text{Matick (4-50)}$$