Debye Surface Currents PhL 5.19.14

Today is 10.8.14 and I don't really feel like reviewing the stuff below. I think I have put this topic to bed in Appendix D.9 (b). But if it comes back, below is a review of my various pieces of work on this topic.

I thought this issue was resolved, but now it is back. It has come and gone several times already.

Part I: Review of Past Work on Debye Surface Currents. **1**
1. bull by the horns doc Section 2 1
2. Continuity at conductor surface doc 1
3. Computation of A_z for the two cylinders.... (Section 11) 1
4. The Surface Currents Issue 2
5. Work done in Appendix A below in this document. 2
6. Bug to deal with. 3
Appendix A 4

Part I: Review of Past Work on Debye Surface Currents.

1. bull by the horns doc Section 2

Here I consider the cpbc situation including surface currents, and if I include the surface currents in the two directions, the boundary condition becomes:

$$-j\omega n(\theta)a = -J_r(a-\varepsilon)a + (\partial_z K_z)a + (\partial_\theta K_\theta)$$

In this doc I am convinced that K_z and K_θ are important and theory needs to be completely redone. I note that a free surface current K_z also appears in $(1/\mu_2)(\partial_n A_z)_2 - (1/\mu_1)(\partial_n A_z)_1 = K_z^{free}$ which then seems to wreck my earlier work regarding A_z and μ boundaries. Argghhhh! it says. This led me to do a web search on such surface currents. I thought I had a hit with Pozar, but he was a red herring. I then review what sections of lines doc are threatened by the addition of K_z and K_θ. End of doc.

2. Continuity at conductor surface doc

This seems to be a very careful analysis of the subject of Debye surface currents, probably the best thing I have on the subject, and I added a little to it just now. It argues strongly that the surface currents can be neglected in doing the cpbc. Case 3 has my best direct argument for the validity of the cpbc !!!

3. Computation of A_z for the two cylinders.... (Section 11)

This is not really about Debye surface currents since "deep box", but the ideas are worth noting.

If I take the deep box of the previous section and now define K_z as the TOTAL surface current over depth δ (not just the Debye), and if I assume $E_\theta = 0$ over the entire δ depth so the two θ sides of the box give no contribution since $J_\theta = 0$, I find these results

$K_z(\varphi,z) = (j+1)v_d\, n(\varphi,z)$ $\quad$ $K_z(\theta,z) = \delta\, J_z(a,\theta,z)$ $\quad$ $-j\omega\, n(\theta) = [\delta/(j+1)]\,[-j\beta_d\, J_z(a,\theta)]$

The first and last are really the same as they say this

$$J_z(a,\theta) = (j+1)\,(v_d/\delta)\, n(\theta,z)$$

and this is perhaps my earliest derivation of the fact that " $J_z(a,\theta)$ at the surface tracks $n(\theta)$". This thing comes from div J = $-\partial_t\rho$ evaluated for the "deep box" assuming $E_\theta = 0$ on box sides. Later in lines doc Section 6.5 (d) I derive a different result using both div E = 0 and the cpbc and I get

$$E_z(a,\theta) = (-j\omega/\sigma)\,(\beta/\beta_d)\, n(\theta)$$

but right now I see this is the same thing:

$$J_z(a,\theta) = (-j\omega)\,(\beta/\beta_d)\, n(\theta) = (-j\omega)\,[e^{j3\pi/4}\,(\sqrt{2}/\delta)\,]\,/\,(\omega/v_d)\, n(\theta)$$

$$= (-j)\, v_d\,[e^{j3\pi/4}\,(\sqrt{2}/\delta)\,]\, n(\theta) = (-j)\, v_d\,(j-1)/\sqrt{2}\ *\ (\sqrt{2}/\delta)\,]\, n(\theta)$$

$$= (1+j)\, v_d\ (1/\delta)\,]\, n(\theta) = (1+j)\,(v_d/\delta)\, n(\theta)$$

which is the same! So this is perhaps a better way to get this result!

4. The Surface Currents Issue

This is an earlier summary of the Debye and other issues. Sections 1,7,8,10 involve Debye.

In **Section 1** I look again on the web for surface currents but find nothing on Debye.

In **Section 7** is an EXELLENT summary of why I can ignore Debye surface currents. It is based on the idea that such a small fraction of the current is in the Debye layer. Still, I think I item 2 Case 3 above is the best direct argument for validity of the cpbc.

In **Section 8** I talk about "where does n(θ) come from" which is still a very active question for me. The arguments here are relevant, but they don't do what I want them to do and I will work on that soon.

Section 10 looks at this perhaps reasonable hybrid cpbc version

$$J_r(a,\theta) + j\beta_d K_z(\theta) = j\omega n(\theta) \qquad \text{each term} = \text{amps/m}^2$$

$$E_r(a,m) + j\beta_d\, \delta_{debye} E_z(a,m) = j(\omega/\sigma) N_m$$

In this form, it is hard to arm-wave the K_z term away. I then use this form to recompute a_m and K_m in a very long algebra session. But in the end, I argue that $(\beta'\, \delta_{debye}) << 1$ and I then end up with the exact same Appendix D values I now have for a_m and K_m !

5. Work done in Appendix A below in this document.

As in earlier items above, I consider a box at the surface and get (same as just above)

$$-j\omega\, n = J_r - j(\omega/v_d)\, K_z^{Debye}$$

But then if I set $K_z^{Debye} = v_D n(\theta)$, I get $J_r = 0$. I then have BC's $J_r = 0$ and $J_\theta = 0$ and I show that this forces Appendix D to have $a_m = 0$ and $K_m = 0$ so the inside of the wire is totally quiet! I then try to rescue things by bringing back the azimuthal current so then [with the cancelling terms above]

$$0 = J_r + \partial_\theta K_\theta^{Debye}$$

which makes a horrible world of azimuthal surface currents swirling around.

The problem here which I have to write up somehow is this:

$K_z^{Debye} \neq v_d n(\theta)$

$K_z = v_d n(\theta)$ where K_z includes the full δ thickness including the Debye

I think by the way that (4.11.19a) claiming $i(z) = q(z)v_d$ is correct, an equation having a similar form.

TBC is now 1:45 May 20, 2014

6. Bug to deal with.

I want to talk about the Debye layer, but it seems to have a carrier density a lot different from the normal bulk conductor. Recall that the conductivity is given by

$$\sigma = (n_c q^2 \tau/m)$$

so you would imagine that n_c is a lot larger in the Debye layer than elsewhere where it is only 1 charge per atom. Larger conductivity weakens my argument of ignoring the current of this layer. In Appendix E I write that $\rho(x) = \rho(0)\, e^{-x/\lambda_D}$ as you move away from the surface. This stuff has to integrate to $n(\theta)$ so we get the familiar type of result,

$n(\theta) = \rho(0)\, \lambda_D$ $\rho(0) = n(\theta) / \lambda_D$ = probably a very LARGE number.

$n_c(0) = \rho(0)/e = n(\theta) / (e\lambda_D)$

Looking at the numbers in Appendix N, can I learn just how big this free charge stuff is compared to the normal carrier density in the conductor? A typical value for $n(\theta)$ we can get from our two cylinder thing

$$n(\theta)a = 2\pi\varepsilon \frac{V}{\xi_2 - \xi_1} \quad \frac{1}{2\pi} \quad \frac{|\mathrm{sh}\xi_1|}{\mathrm{ch}\xi_1 + \cos\theta} \sim \varepsilon V$$

$n(\theta) \sim \varepsilon V/a$ dim = farad/m * volts/m = farad-volts/m^2 = Cou/m^2 correct

How big is this for say a = 1 mm and V = 10 volts

$n(\theta) = 9x10^{-12} * 10/ 10^{-3} = 90 \times 10^{-9} \sim 10^{-7}$ Cou/m^2

How about parallel plate capacitor of area A and separation s. Then V=Es, εE = n so n = εV/s which has the same form. Separation 1 mm gives the above.

Then from the above

$n_c(0) = n(\theta) / (e\lambda_D)$ dim = Cou/m^2 / (Cou-m) = 1/m^{3}OK

$= 10^{-7} / [1.6 \times 10^{-19} * 10^{-10}] = 1/1.6 * 10^{-7+29} = 0.7 \times 10^{22}$ carriers/m^3

This is large, but it is still much smaller than

$n = 8.5 \times 10^{28}$ electrons/m^3 // for copper

Conclusion: In a practical situation, the volume density of free charge in the Debye layer 10^{22} is negligible compared to the density of conduction carriers 10^{28}. Therefore, although these free charges are available as extra current carriers, they basically have no significant effect. This is consistent with my general claim that K_z^{Debye} is very small compared to any volume current in the conductor. I think this says I can set $\sigma = \sigma_d$ in my presentation argument

****

Appendix A

I am still worried about surface currents flowing out the front and back sides of the box:

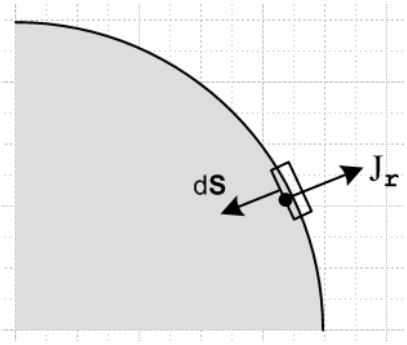

If I compress the box right to the math surface, I exclude the Debye currents, but then when I measure J_r just under the surface, I would have to use

$\mathbf{J} = \sigma\mathbf{E}$ - D grad ρ

$J_r = \sigma E_r$ - D a $\partial_r\rho$

so then I lose the $J_r = \sigma E_r$ connection. So just including the Debye stuff in the bulk maybe doesn't work.

I think the idea of continuous E_z at the surface says the surface charge sees the same E_z as inside the volume, say at 10A in from the surface. So maybe

$$J_z^{bulk} = \sigma^{bulk} E_z$$
$$J_z^{Debye} = \sigma^{Debye} E_z \qquad K_z^{Debye} = \lambda_D J_z^{Debye} \quad \text{amps/m}$$

Let's say the box is λ_D thick which is on the order of 1 Angstrom. The z current through the front and back sides of the box could then be

$$[J_z^{Debye}(z+dz) - J_z^{Debye}(z)] \lambda_D \, a d\theta$$

Then

$$-j\omega[\int_v \rho \, dV] = \int_s \mathbf{J} \bullet d\mathbf{S}$$

$$-j\omega \, dq = J_r dA + [J_z^{Debye}(z+dz) - J_z^{Debye}(z)] \lambda_D \, a d\theta \qquad dA = a d\theta dz$$

or

$$-j\omega \, n \, dA = J_r dA + [J_z^{Debye}(z+dz) - J_z^{Debye}(z)] \lambda_D \, a d\theta$$

or

$$-j\omega \, n \, a d\theta dz = J_r \, a d\theta dz + [J_z^{Debye}(z+dz) - J_z^{Debye}(z)] \lambda_D \, a d\theta$$

or

$$-j\omega \, n = J_r + [J_z^{Debye}(z+dz) - J_z^{Debye}(z)] \, (1/dz)\lambda_D$$

or

$$-j\omega \, n = J_r + \partial_z J_z^{Debye}(z) \, \lambda_D$$

or

$$-j\omega \, n = J_r - j\beta_d J_z^{Debye}(z) \, \lambda_D$$

or

$$-j\omega \, n = J_r - j(\omega/v_d) J_z^{Debye}(z) \, \lambda_D$$

or

$$-j\omega \, n = J_r - j(\omega/v_d) \, K_z^{Debye}$$

Not sure what to conclude there. How about instead

$$K_z^{Debye} = v_D n(\theta) \quad = \text{m/sec} * \text{Coul/m}^2 = \text{amp/m}$$

I know the size of v_D and $n(\theta)$ so I know K_z. Is there really such a current? If the pattern $n(\theta)$ really moves down the surface in the z direction at v_D, then I guess yes. But then I get

$$-j\omega \, n = J_r - j(\omega/v_d) \, K_z^{Debye} \quad = J_r - j\omega n(\theta)$$

and then I end up with $J_r = 0$!!! That would certainly wreak havoc on lines doe!

[this makes one suspicious of the equation $K_z^{Debye} = v_D n(\theta)$]

There must be some way to find out what really happens at the surface!

1. n(θ) must move down the wire at v_D like everything else including V(z), **E**, **B**, q and so on.

2. If this is so, then this movement uses up divE = -jωρ and then $J_r = 0$.

3. This is a very different boundary condition on the round wire than what I was using.

Where would this new boundary condition lead?

First summary of the E field solutions (D.2.21)

$$E_z(r,m) = -j\,(\beta'/\beta_d)\,\frac{K_m}{2}\,J_m(x) \qquad x = \beta' r \qquad \textit{(D.1.27)}$$

$$E_r(r,m) = a_m\,x^{-1}\,J_m(x) + \frac{K_m}{2}\,J_{m+1}(x) \qquad \beta'^2 = \beta^2 - \beta_d^2 \qquad \textit{(D.2.11)}$$

$$jE_\theta(r,m) = -a_m\,x^{-1}\,J_m(x) + \left(\frac{K_m}{2} + \frac{a_m}{m}\right) J_{m+1}(x) \qquad \textit{(D.2.15)}$$

If I now assume that

$$E_r(a,m) = 0 \quad \Rightarrow \quad a_m\,x_a^{-1}\,J_m(x_a) + \frac{K_m}{2}\,J_{m+1}(x_a) = 0$$

$$jE_\theta(a,m) = 0 \quad \Rightarrow \quad -a_m\,x_a^{-1}\,J_m(x_a) + \left(\frac{K_m}{2} + \frac{a_m}{m}\right) J_{m+1}(x_a) = 0$$

I can add these equations to get

$$\frac{K_m}{2}\,J_{m+1}(x_a) + \left(\frac{K_m}{2} + \frac{a_m}{m}\right) J_{m+1}(x_a) = 0$$

which says

$$K_m + \frac{a_m}{m} = 0 \qquad \text{and I still retain } a_0 = 0 \text{ as in (D.2.16)}$$

Now go back to the first equation:

$$a_m\,x_a^{-1}\,J_m(x_a) + \frac{K_m}{2}\,J_{m+1}(x_a) = 0$$

$$\frac{a_m}{m}\,m\,x_a^{-1}\,J_m(x_a) + \frac{K_m}{2}\,J_{m+1}(x_a) = 0$$

$$-K_m\ m\ x_a^{-1}\ J_m(x_a) + \frac{K_m}{2}\ J_{m+1}(x_a)\ = 0$$

This equation then requires that $K_m = 0$, so contradiction!

Look back at the two conditions again, interpret as

$$Aa_m + BK_m = 0$$
$$Ca_m + DK_m = 0$$

Interpret again as

$$Ax + By = 0$$
$$Cx + Dy = 0$$

This is two straight lines through the origin. Unless both lines are the same, the only solution is x = y = 0, and that is what is happening above.

Fact: If you assume that E_r and E_θ both vanish on the cylinder boundary, you are forced to have **E** = 0 everywhere inside. [correct]

You can think of this as coming from div E = 0 just inside the surface.

Does this say $E_\theta \neq 0$ at the surface? That there are azimuthal surface currents after all? But then the boundary condition would change again:

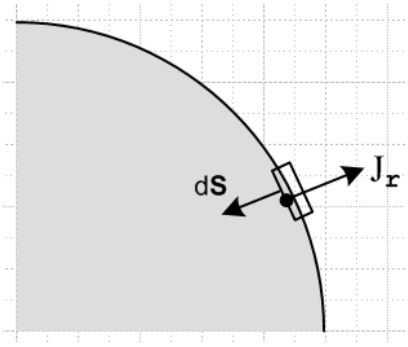

$$-j\omega[\int_V \rho\, dV] = \int_S \mathbf{J} \bullet d\mathbf{S} \qquad dA = ad\theta dz$$

$$-j\omega\, dq = J_r dA + [\, J_z^{Debye}(z+dz) - J_z^{Debye}(z)]\, \lambda_D\, ad\theta + [J_\theta(\theta+d\theta)-J_\theta(\theta)]\, \lambda_D dz$$

or

$$-j\omega\, n\, dA = J_r dA + [\, J_z^{Debye}(z+dz) - J_z^{Debye}(z)]\, \lambda_D\, ad\theta \quad + [J_\theta(\theta+d\theta)-J_\theta(\theta)]\, \lambda_D dz$$

or

$$-j\omega\, n\, ad\theta dz = J_r\, ad\theta dz + [\, J_z^{Debye}(z+dz) - J_z^{Debye}(z)]\, \lambda_D\, ad\theta + [J_\theta(\theta+d\theta)-J_\theta(\theta)]\, \lambda_D dz$$

or

$$-j\omega\, n = J_r + [\, J_z^{Debye}(z+dz) - J_z^{Debye}(z)]\,(1/dz)\lambda_D + [J_\theta(\theta+d\theta)-J_\theta(\theta)](1/ad\theta)\,\lambda_D$$

or

$$-j\omega\, n = J_r + \partial_z J_z^{Debye}(z)\,\lambda_D + (1/a)\partial_\theta J_\theta^{Debye}(z)\,\lambda_D$$

or

$$-j\omega\, n = J_r - j\beta_d J_z^{Debye}(z)\,\lambda_D + (1/a)\partial_\theta J_\theta^{Debye}(z)\,\lambda_D$$

or

$$-j\omega\, n = J_r - j(\omega/v_d) J_z^{Debye}(z)\,\lambda_D + (1/a)\partial_\theta J_\theta^{Debye}(z)\,\lambda_D$$

or

$$-j\omega\, n = J_r - j(\omega/v_d)\, K_z^{Debye} + (1/a)\partial_\theta K_\theta^{Debye}$$

Now what? What about the idea that $K_z^{Debye} = v_D n(\theta)$? If "the pattern just moves down the line", then this must still be true, and then

$$-j\omega\, n = J_r - j(\omega/v_d)\,[v_D n(\theta)] + (1/a)\partial_\theta K_\theta^{Debye}$$

$$-j\omega\, n = J_r - j\omega\, n + (1/a)\partial_\theta K_\theta^{Debye}$$

$$0 = J_r + (1/a)\partial_\theta K_\theta^{Debye}$$

and then we are back with a condition on J_r again. Then I have J_r "feeding" the azimuthal current instead of feeding $n(\theta)$. Very twisted!